OPTIMAS







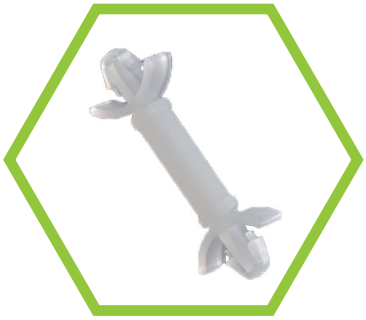

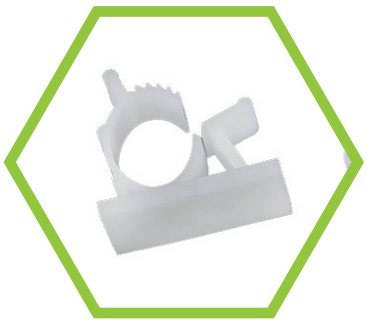

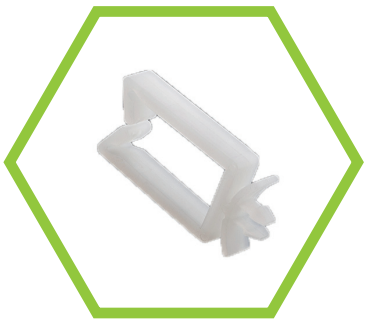

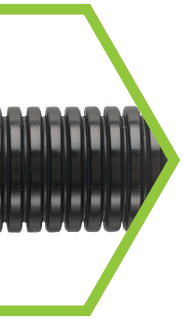



新产品
WHAT'S NEW

optimascomponents.com.cn

Key Contacts & Introduction
关键信息和公司简介

Optimas Solutions - Components Division

In 1967, a company called Heyco Limited started trading as the exclusive UK distributor for Heyco Inc (Jersey, USA). Since then, Heyco has built up its reputation to become a first class supplier for 'C' class plastic components servicing a global market, and has developed a comprehensive and diverse range of quality parts with over 10,000 product lines.

This breadth of products and quality of service has been achieved through a close relationship with our suppliers.

In September 2000, Heyco Ltd was acquired by the Walters Hexagon Group, and shortly after relocated to a purpose built state-of-the-art 20,000 sq.ft European Distribution Centre.

In September 2003, the Group including Heyco Ltd was acquired by Anixter International, and in 2005, Heyco Ltd changed its name to Anixter Components, further strengthening the alliance with the Anixter Group.

In May 2015 Anixter International Inc. sold its OEM Supply - Fasteners business, of which we were a part, to American Industrial Partners (AIP) and a new standalone, independent organisation was formed - called Optimas Solutions, of which we are proud to be the Components Division.

Optimas Solutions - Components Division (China)

In June 2010, Anixter Component Solutions started its business in China.

In August 2011, Anixter Component Solutions started its sales in China, soon later, build up its reputations for massive stocks, quick quotation and delivery in the distribution industry, and became the top one authorized distributors of various branded manufacturers, like Heyco, Techflex, TST, ETCO, RAF, Caplugs and etc. Besides, Components Division is providing a fresh and creative technical solutions to customers which is different with the traditinal distribution business, to work with technical engineers of customers and develop the accurate products against customer's applications, then provide the manufacturing solution.

In August 2015, Anixter International Inc. sold its OEM Supply-Fasteners segment including Components division to American Industrial Partners, as part of the global transaction, Anixter Components in China became an independent division under the new entity of Optimas (Suzhou) Trading Co., Ltd, and operate the business as Optimas Solutions - Components Division.

安普达 – 零部件事业部

Heyco (UK) Limited 公司成立于 1967 年，作为美国新泽西州 Heyco 在英国的独立分销商开始业务，从那时起，Heyco (UK) Limited 在业界建立起了良好的声誉，成为一流的 'C' 类零部件供应商服务于全球市场，并开发出范围超过 10,000 个全面和多样化的高质量产品系列。

通过与我们的供应商建立了密切的关系使我们的产品和服务质量达到很高的层次。

2000 年 9 月，Heyco (UK) Limited 公司被 Walters Hexagon Group 收购，不久后搬迁到目前的地址并建立了 20000 平方英尺的欧洲分销中心。

2003 年 9 月，Walters Hexagon Group 包括 Heyco Limited 被艾利斯特 (Anixter) 集团收购，并于 2005 年 Heyco Limited 更名为艾利斯特零部件事业部 (Anixter Component Solutions)，进一步加强与 Anixter 的集团的业务合作。

2015 年 5 月，艾利斯特 (Anixter) 集团将 OEM Supply – Fasteners 业务部门出售给美国私人投资公司 AIP (American Industrial Partners)，作为 OEM Supply – Fasteners 业务部门的一部分艾利斯特零部件事业部 (Anixter Component Solutions) 也一并被出售，成为一个新独立的组织 - Optimas Solutions 公司，我们非常自豪能够成为其零部件事业部 (Components Division)。

安普达 – 零部件事业部（中国）

2010 年 6 月，艾利斯特零部件事业部 (Anixter Component Solutions) 进入中国。

2011 年 8 月，艾利斯特零部件事业部 (Anixter Component Solutions) 开始进行国内销售，以海量库存、快速报价和交付于业界闻名，并成为众多品牌在亚太区首选的分销商，如 Heyco, Techflex, TST, ETCO, RAF, Caplugs 等等。同时零部件事业部以提供技术解决方案而与传统的分销模式而不同，通过与客户的工程技术人员广泛合作开发能够准确满足客户需求的产品，并提供制造解决方案。

2015 年 8 月，随着 OEM Supply – Fasteners 业务部门的出售给美国 AIP 私人股本公司，艾利斯特零部件事业部 (Anixter Component Solutions) 作为独立的品牌在国内更名为安普达零部件事业部 (Optimas Solutions - Components Division) 继续其在国内的业务。



EUROPEAN HEADQUARTERS

OPTIMAS SOLUTIONS - COMPONENTS DIVISION (UNITED KINGDOM)

Unit A, Acorn Business Park,
Ling Road, Poole, Dorset,
UK. BH12 4NZ
T: +44 (0)1202 865222
F: +44 (0)1202 865270
E: sales@optimascomponents.com

ASIA PACIFIC HEADQUARTERS

OPTIMAS SOLUTIONS - COMPONENTS DIVISION (CHINA)

A: No. 96, Weixi Road, Weiting Town, Suzhou Industrial Park,
Suzhou, China. 215121
T: +86 512 6733 5583 Or 6733 5586
F: +86 512 6733 5589
E: china@optimascomponents.com

OPTIMAS SOLUTIONS - COMPONENTS DIVISION (HONGKONG)

A: Gridlines 4008W - 4017W, 4/F, ATL Logistics Centre B,
Berth 3, Kwai Chung, Hong Kong
T: +86 512 6733 5583 Or 6733 5586 (Sales)
T: +852 37627370 (Logistic)
F: +86 512 6733 5589
E: china@optimascomponents.com (Sales)

亚太总部

安普达 – 零部件事业部（中国）

A: 中国．江苏省．苏州市．工业园区．
唯亭镇．唯西路 96 号 215121
T: +86 512 6733 5583 或 6733 5586
F: +86 512 6733 5589
E: china@optimascomponents.com

安普达 – 零部件事业部（香港）

A: 中国．香港．新界．葵涌三号货柜码头．
亚洲货柜物流中心 B 座 4008 - 4017 西翼
T: +86 512 6733 5583 或 6733 5586（销售）
T: +852 37627370（仓库）
F: +86 512 6733 5589
E: china@optimascomponents.com（销售）

THE BIG BOOK OF SMALL PARTS
小零件大词典



NOT ONLY PRODUCTS, BUT KNOWLEDGES - OPTIMAS
不仅是产品，更有知识 – 安普达

The most important job for any distributor is getting the right product where it needs to be, when it needs to be there. At Optimas Components, we continously invest in staff with the depth and breadth of technical knowledges and understanding that we have at Optimas, herein, our customers regard us as being the - Technical Distributor.

对于任何分销商来说最重要的工作就是在正确的地方和正确的时间提供客户正确的产品。在安普达零部件事业部，我们不断地在员工技术知识的拓展和提高方面进行投入，使我们员工清楚地了解我们的产品，因此，我们的客户归结我们是 - 技术分销商。

As a technical distributor, Optimas Solutions - Components Division has in-depth and broad based engineering, product, industry, application and material knowledge. This allows us to advise customers as to the optimum solution to their needs.

作为一家技术型分销商，安普达 - 零部件事业部具有深入和广泛的工程技术，产品，行业，产品应用和材料本身的基础知识。这允许我们能够根据客户的需求提供客户最优化的解决方案。

At the beginning of your project development, we can provide you the useful technical and marketing information for engineers and purchasing professionals, and also provide you the support documents for your approval: Drawings, Product Specifications, ISIR Documents, Material Data Sheets, Test Methods, Brochures and Catalogues.

在您项目开发初期，我们能够为您的工程和采购专家提供有用的技术知识和市场信息。同样能够为您提供支持性的承认文件，包括：图纸，产品规格书，首样报告，材料数据表，测试方法，产品扉页和产品目录等。

Call us on +86 512 6733 5586 or 6733 5583 to discuss your requirements

请联系 +86 512 6733 5586 或 6733 5583 讨论您的需求

Fax: +86 512 6733 5589
Web: www.optimascomponents.com.cn

OPTIMAS

WHAT'S THE NEWEST
最新产品

NEW

Conduits & Fittings 波纹管及接头


P1


P1


P2


P2


P3

Liquid Tight Fittings 防水接头


P5-6


P7-8


P9

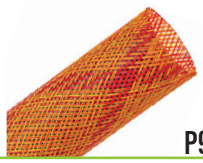
P9

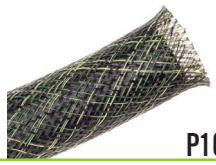
P10

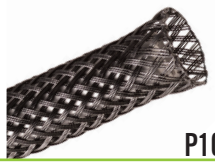
P10


P11

Sleevings 编织套管


P11


P12


P12


P13


P13


P14


P14


P15


P15


P16


P17

Cable Clips & Clamps 固定线夹


P19


P19


P20


P20


P21


P21


P22


P23


P24


P24


P25


P26


P27


P28


P28


P31


P31

P32

P33

P34

P34

P34

OPTIMAS

Tel: +86 512 6733 5586 or 6733 5583
Email: china@optimascomponents.com

NEW

WHAT'S THE NEWEST
最新产品

PCB Accessories PCB 板 附件


P35


P36


P37


P38


P39


P40


P41


P42


P42


P43


P44


P45


P46


P47


P48


P48


P49


P50


P50


P51


P52


P52


P53


P54


P56


P57


P58


P59


P60


P61


P62


P63


P64


P64


P65


P67


P68


P70


P70


P71

PCB Accessories PCB 板 附件

P71

P72

P72

P74

P74

P75

P75

P76

P76

P76

Fax: +86 512 6733 5589
Web: www.optimascomponents.com.cn

OPTIMAS

Full Product Range - Our Main Catalogue
全部产品范围 – 我们的主目录

Terminals
压接和冲压端子



Wires & Cables
电线和电缆

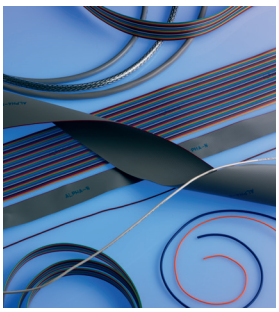

Conduits & Fittings
波纹管及接头



Liquid Tight Fittings
防水接头



SR Bushing
应力缓解线扣



Bushings & Grommets
护线环



Sleevings & Tubings
编织套管和热缩管



Cable Clips & Clamps
线夹和管夹



Cable Ties & Mounts
扎带和固定座



Caps & Plugs
盖和塞



PCB Accessories
PCB 板附件



Panel Fasteners & Rivets
面板紧固件和铆钉



Metal & Plastic Fasteners
金属和塑料紧固件



Bumpers & Feet
缓冲垫和脚撑



Knobs & Handles
旋钮和把手



Call us on +86 512 6733 5586 or 6733 5583 to discuss your requirements

请联系 +86 512 6733 5586 或 6733 5583 讨论您的需求

Main Supplying Parters
主要供应商合作伙伴

HEYCO® · TECHFLEX · ETCO Old Values, New Ideas · TST Tapper Sealing Technology · HUMMEL®

AlphaWire · PANDUIT · Thomas&Betts · RAF Raf Electronic Hardware MW Industries, Inc.

OPTIMAS

Tel: +86 512 6733 5586 or 6733 5583
Email: china@optimascomponents.com

Nylon Corrugated Conduits/Tubings
尼龙波纹管



Approvals:
认证：

c UL us

Specifications: RoHS ✓
规格：

Material: Halogen Free Nylon 6
Colour: Black
Temperature Range: -20°C to 105°C
Voltage Rating: 300V

材料：无卤尼龙 6
颜色：黑色
工作温度：-20°C 到 105°C
额定电压：300V

- Low Fire Hazard Including Low Smoke, Low Toxicity as well as Halogen, Sulphur, and Phosphorus Free
- For use with all types of equipment, machinery, pumps, motors, and HVAC equipment
- Suitable for use in outdoor locations

- 低火灾风险包括低烟，低毒以及无卤、无硫和无磷
- 适用于所有类型的设备，机器，水泵，电机和暖通空调设备
- 适合在户外使用

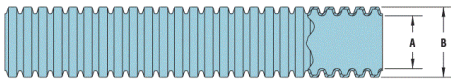

Use with type I nylon conduit fittings - straight or sweep. Also use with type I nylon unions.
与 I 型尼龙波纹管接头 - 直通或弯头式配合使用。
也可与 I 型尼龙快插活套接头配套使用。

Part Number and Flammability 零件号和阻燃等级		Conduit Size 尺寸	Inside Bend Radius 内侧弯曲半径	A Inside Diameter 内径	B Outside Diameter 外径	Coil Length Meters 整卷长度（米）
UL94V-2	UL94V-0					
66228400	66228421	10 mm	15.0	6.2	10.0	50
66228402	66228422	13 mm	20.0	9.6	13.0	50
66228404	66228424	16 mm	30.0	12.0	15.8	50
66228406	66228426	21 mm	40.0	16.5	21.2	50
66228410	66228432	28 mm	55.0	22.3	28.5	50
66228414	66228434	34 mm	65.0	28.2	34.5	50
66228416	66228436	42 mm	80.0	36.0	42.5	25
66228418	66228438	54 mm	95.0	47.1	54.5	25

Nylon Corrugated Conduit/Tubing Mounting Clips
尼龙波纹管固定支架



Approvals:
认证：

CE

Specifications: RoHS ✓
规格：

Material: Nylon 66
Colour: Black
Flammability Rating: UL94V-2
Temperature Range: -50°C to 135°C

材料：尼龙 66
颜色：黑色
阻燃等级：UL94V-2
工作温度：-50°C 到 135°C

- For mounting Nylon Corrugated Conduit or Tubing securely into place, vertically or horizontally
- Low profile design for space savings and pleasing appearance
- Can be easily opened for temporary access/removal and closed again to secure conduit

- 用于竖直或水平方向固定安装尼龙波纹管
- 高度低，节省空间并改善外观
- 可以轻松打开用于暂时安装 / 移除，并再次关闭以固定软管

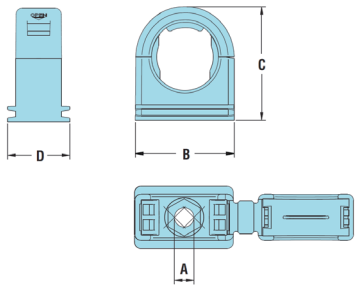

Part Number 零件号	Fits Conduit Size 配管尺寸	A Mounting Hole Dia. 安装直径	B Width 宽度	C Max O.A. Height 最大总高度	D Max O.A. Thickness 最大总厚度
66128902	13 mm	5.0	22.7	26.4	20.0
66128904	16 mm	5.2	26.4	29.8	20.0
66128906	21 mm	6.2	31.8	36.5	20.0
66128908	28 mm	6.2	40.8	44.5	20.0
66128910	34 mm	6.2	48.0	51.5	20.0
66128912	42 mm	6.2	57.2	60.2	20.0

Recommended distance between brackets at intervals not greater than 3 feet (914 mm) as required by Article 351-27 of 1996 NEC
按照 1996 年 NEC 第 351-27 条的要求，建议安装时支架之间的距离不能超过 3 英尺（914 毫米）

Use one standard #10 (4-5M) screw for attaching bracket to panel or chassis (screw not included)
使用一个标准的 #10 (4-5M) 螺钉将支架固定在面板上（不配螺钉）



Type I Nylon Corrugated Conduit/Tubing Unions
I 型尼龙波纹管快插活套接头

- One piece fast fit coupler to join corrugated conduit
- 一体式快插接头，用于连接波纹管

Specifications: RoHS ✓
规格：

Material: Nylon 66
Colour: Black
Flammability Rating: UL94V-2
Temperature Range: -50°C to 135°C

材料：尼龙 66
颜色：黑色
阻燃等级：UL94V-2
工作温度：-50°C 到 135°C

Approvals:
认证：

CE

Part Number 零件号	Fits Conduit Size 配管尺寸	A Bore 内径	B Max. Diameter 最大外径	C Length 长度
66128944	16 mm	11.0	29.0	59.0
66128946	21 mm	14.5	32.0	71.0
66128948	28 mm	19.5	44.0	81.0
66128950	34 mm	26.5	51.0	87.0

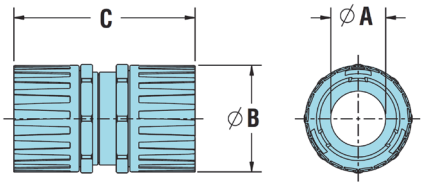



Type I Nylon Conduit Fittings - Straight-Thru
I 型尼龙波纹管接头 - 直通

- No disassembly required, instead the installer simply pushes the conduit or tubing into the fitting, then tightens the domed sealing nut
- No threading of the conduit or tubing is required to install. This eliminates the possibility of cutting the conduit and creating leak paths

- 无需拆卸，只需将波纹管推入接头，然后拧紧迫紧螺母即可
- 安装时无需旋拧波纹管，这样就避免了波纹管被损坏而产生泄漏的风险

Specifications: RoHS ✓
规格：

Material: Nylon 6/6 with Silicone Rubber Glands
Colour: Black
Temperature Range: -30°C to 105°C
IP Rating: IP 66

材料：尼龙 66 和硅胶密封圈
颜色：黑色
工作温度：-30°C 到 105°C
IP 等级：IP 66

Approvals:
认证：

c UL us

Part Number and Flammability 零件号和阻燃等级		Fits Conduit Size 配管尺寸	Thread Size 螺纹尺寸	A Clearance Hole 光孔直径	B Max O.A. Length 最大总长度	C Thread Length 螺纹长度	D Wrenching Nut Thk. 扳手位厚度	E Wrenching Flat 扳手位尺寸
UL94V-2	UL94V-0							
NPT Hubs NPT 螺纹								
6612H8501	6612H8501F	10 mm	1/4 NPT	13.7	40.0	11.9	4.8	24.6
6612H8503	6612H8503F	13 mm	3/8 NPT	17.3	45.0	12.7	4.8	29.2
6612H8504	6612H8504F	16 mm	3/8 NPT	17.3	47.5	13.2	4.8	34.0
6612H8506	6612H8506F	16 mm	1/2 NPT	22.2	50.5	16.3	4.8	34.0
6612H8510	6612H8510F	21 mm	1/2 NPT	22.2	50.5	16.0	4.8	37.9
6612H8516	6612H8516F	28 mm	3/4 NPT	28.1	52.5	16.0	4.8	45.7
6612H8520	6612H8520F	34 mm	1 NPT	34.9	59.5	19.3	4.8	49.5
6612H8522	6612H8522F	42 mm	1-1/4 NPT	44.0	62.0	20.1	5.5	64.5
6612H8524	6612H8524F	42 mm	1-1/2 NPT	50.4	61.7	20.1	5.5	64.5
6612H8528	6612H8528F	54 mm	2 NPT	62.7	62.0	20.3	5.5	69.6
Metric Hubs 公制螺纹								
6612H8570	6612H8570F	10 mm	M12	12.0	40.0	11.4	4.8	24.9
6612H8572	6612H8572F	13 mm	M16	16.0	45.0	12.5	4.8	29.5
6612H8574	6612H8574F	16 mm	M16	16.0	47.5	12.5	4.8	34.3
6612H8576	6612H8576F	16 mm	M20	20.0	50.5	15.5	4.8	34.3
6612H8580	6612H8580F	21 mm	M20	20.0	50.5	15.5	4.8	38.0
6612H8586	6612H8586F	28 mm	M25	25.0	52.5	15.8	4.8	46.0
6612H8590	6612H8590F	34 mm	M32	32.0	59.5	19.3	4.8	50.0
6612H8592	6612H8592F	42 mm	M40	40.0	62.0	19.8	5.5	65.0
6612H8594	6612H8594F	42 mm	M50	50.0	57.5	16.0	5.5	65.0
6612H8598	6612H8598F	54 mm	M63	63.0	58.0	16.0	5.5	70.0

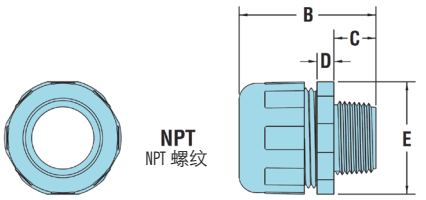

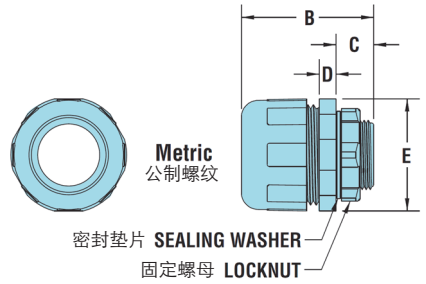

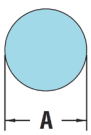

SUGGESTED CLEARANCE HOLE FOR NON-THREADED MOUNTING
建议安装在无螺纹光孔中

OPTIMAS

Tel: +86 512 6733 5586 or 6733 5583
Email: china@optimascomponents.com

Type I Nylon Conduit Fittings - 90° Sweep Fittings
I 型尼龙波纹管接头 - 90° 弯头



Approvals:
认证：

c UL us

Specifications: RoHS ✓
规格：

Material: Nylon 6/6 with Silicone Rubber Glands
Colour: Black
Temperature Range: -30°C to 105°C
IP Rating: IP 66

材料：尼龙 66 和硅胶密封圈
颜色：黑色
工作温度：-30°C 到 105°C
IP 等级：IP 66

- No disassembly required, instead the installer simply pushes the conduit or tubing into the fitting, then tightens the domed sealing nut
- No threading of the conduit or tubing is required to install. This eliminates the possibility of cutting the conduit and creating leak paths

- 无需拆卸，只需将波纹管推入接头，然后拧紧迫紧螺母即可
- 安装时无需旋拧波纹管，这样就避免了波纹管被损坏而产生泄漏的风险

Part Number and Flammability 零件号和阻燃等级		Fits Conduit Size 配管尺寸	Thread Size 螺纹尺寸	A Clearance Hole 光孔直径	B Max O.A. Height 最大总高度	C Max O.A. Length 最大总长度	D Thread Length 螺纹长度
UL94V-2	UL94V-0						
NPT Hubs NPT 螺纹							
6612H8601	6612H8601F	10 mm	1/4 NPT	13.7	31.0	55.0	11.4
6612H8603	6612H8603F	13 mm	3/8 NPT	17.3	35.0	62.0	12.5
6612H8604	6612H8604F	16 mm	3/8 NPT	17.3	42.2	65.0	12.7
6612H8606	6612H8606F	16 mm	1/2 NPT	22.2	42.2	67.0	15.8
6612H8610	6612H8610F	21 mm	1/2 NPT	22.2	44.5	67.0	15.8
6612H8616	6612H8616F	28 mm	3/4 NPT	28.1	52.0	76.0	16.0
6612H8620	6612H8620F	34 mm	1 NPT	34.9	58.5	91.0	19.6
6612H8622	6612H8622F	42 mm	1-1/4 NPT	44.0	81.5	115.0	20.1
6612H8624	6612H8624F	42 mm	1-1/2 NPT	50.4	81.5	120.0	20.1
6612H8628	6612H8628F	54 mm	2 NPT	62.7	87.1	125.0	20.3
Metric Hubs 公制螺纹							
6612H8670	6612H8670F	10 mm	M12	12.0	31.0	55.0	11.4
6612H8672	6612H8672F	13 mm	M16	16.0	35.0	62.0	12.5
6612H8674	6612H8674F	16 mm	M16	16.0	42.0	65.0	12.5
6612H8676	6612H8676F	16 mm	M20	20.0	42.0	67.0	15.5
6612H8680	6612H8680F	21 mm	M20	20.0	44.0	67.0	15.5
6612H8686	6612H8686F	28 mm	M25	25.0	52.0	76.0	16.0
6612H8690	6612H8690F	34 mm	M32	32.0	58.7	91.0	19.6
6612H8692	6612H8692F	42 mm	M40	40.0	81.3	115.0	19.3
6612H8694	6612H8694F	42 mm	M50	50.0	81.3	120.0	16.0
6612H8698	6612H8698F	54 mm	M63	63.0	86.9	125.0	16.0

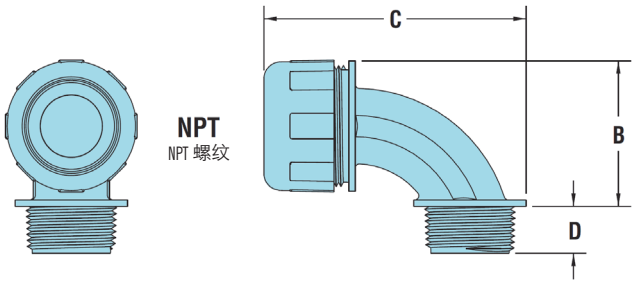

NPT
NPT 螺纹

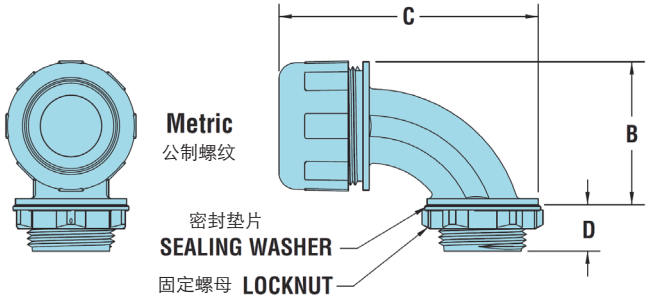

Metric
公制螺纹

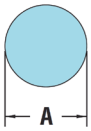

SUGGESTED CLEARANCE HOLE FOR NON-THREADED MOUNTING
建议安装在无螺纹光孔中



Call us on +86 512 6733 5586 or 6733 5583

to discuss your requirements

请联系 +86 512 6733 5586 或 6733 5583 讨论您的需求

Cannot find what you are looking for?

Bespoke part sourcing

If you cannot find the exact part to suit your requirements in our standard catalogue range, we have a team on hand dedicated to sourcing the product that you need, thus giving you all the benefits of a single source component supply.

- No need to waste time shopping around
- Reduce your supplier base
- Have only one source for all your component needs

未找到所需产品？

定制件采购

如果您在我们目录上标准产品范围中无法找到符合您要求的零件，我们的团队将随时为您搜索您所需的产品，单一的组件供应商让您多方面受益。

- 无需浪费时间用于寻找这些小零部件
- 减少您的供应商
- 您所有小零件仅需一个供应商

Tel: +86 512 6733 5586 or 6733 5583
Email: china@optimascomponents.com

Nylon Metric Thread Cable Glands - Standard & Elongated Threads
尼龙公制螺纹电缆接头 - 标准和加长型安装螺纹



Specifications:
规格

RoHS ✓

材料：接头和迫紧螺母 - 尼龙 6
密封圈 - 氯丁橡胶
密封垫片 - 丁腈橡胶
阻燃等级：UL94V-2
工作温度：持续温度 -20 °C to 100 °C
间歇温度 -30 °C to 150 °C
IP 等级：IP 68 (5 Bar, 30 min)

Materials: Body & Sealing Nut - Nylon 6
Sealing Gland - Chloroprene
Sealing Washer - NBR
Flammability: UL94V-2
Operating temperature: Permanent -20 °C to 100 °C
Intermittent -30 °C to 150 °C
IP Rating: IP 68 (5 Bar, 30 min)

- Protects and anchors cable at chassis entry
- Protects against ingress of water and dust

- 在安装面板接口处保护并固定电缆
- 防止水和灰尘进入

Approvals:
认证



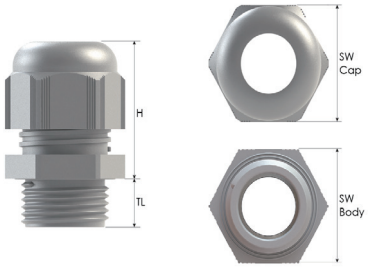

These cable glands are supplied complete with sealing washer and locknut.
该系列电缆接头提供装配好的
密封垫片和安装固定螺母。

Part Number and Colour 零件号和颜色		** Diameter of Cables/Tubing to be Accommodated 管 / 线径范围	Part Dimensions 零件尺寸				
			Mounting Thread Type and Size 安装螺纹规格	Chassis Clearance Hole +0.3 / -0.0 光孔直径	Body and Sealing Nut 接头和迫紧螺母		
Black RAL 9005 黑色	Grey RAL 7035 浅灰色				H max.	TL	SW
Standard Threads 标准安装螺纹							
33089000	33089100	2.0 - 5.0	M12x1.5	12.0	25.3	8.0	15.0
33089003	33089103	3.0 - 6.5	M12x1.5	12.0	25.3	8.0	15.0
33089006	33089106	2.0 - 6.0	M16x1.5	16.0	27.4	8.0	19.0
33089011	33089111	4.0 - 8.0	M16x1.5	16.0	27.4	8.0	19.0
33089016	33089116	5.0 - 9.0	M20x1.5	20.0	32.4	10.0	24.0
33089018	33089118	6.0 - 12.0	M20x1.5	20.0	32.4	10.0	24.0
33089020	33089120	7.0 - 12.0	M20x1.5	20.0	31.9	10.0	27.0
33089022	33089122	7.0 - 13.0	M20x1.5	20.0	34.0	10.0	25.0
33089023	33089123	10.0 - 14.0	M20x1.5	20.0	31.9	10.0	27.0
33089025	33089125	9.0 - 13.0	M25x1.5	25.0	37.7	8.0	29.0
33089027	33089127	9.0 - 16.0	M25x1.5	25.0	38.4	10.0	33.0
33089029	33089129	11.0 - 17.0	M25x1.5	25.0	37.7	8.0	29.0
33089031	33089131	13.0 - 18.0	M25x1.5	25.0	38.4	10.0	33.0
33089033	33089133	11.0 - 15.0	M32x1.5	32.0	42.3	10.0	36.0
33089036	33089136	15.0 - 21.0	M32x1.5	32.0	42.3	10.0	36.0
33089039	33089139	16.0 - 23.0	M40x1.5	40.0	47.4	10.0	46.0
33089041	33089141	19.0 - 28.0	M40x1.5	40.0	47.4	10.0	46.0
Elongated Threads 加长安装螺纹							
33089002	33089102	2.0 - 5.0	M12x1.5	12.0	25.3	15.0	15.0
33089005	33089105	3.0 - 6.5	M12x1.5	12.0	25.3	15.0	15.0
33089008	33089108	2.0 - 6.0	M16x1.5	16.0	27.4	15.0	19.0
33089010	33089110	3.0 - 7.0	M16x1.5	16.0	32.2	15.0	22.0
33089013	33089113	4.0 - 8.0	M16x1.5	16.0	27.4	15.0	19.0
33089015	33089115	5.0 - 10.0	M16x1.5	16.0	32.2	15.0	22.0
33089017	33089117	5.0 - 9.0	M20x1.5	20.0	32.4	15.0	24.0
33089019	33089119	6.0 - 12.0	M20x1.5	20.0	32.4	15.0	24.0
33089021	33089121	7.0 - 12.0	M20x1.5	20.0	31.9	15.0	27.0
33089024	33089124	10.0 - 14.0	M20x1.5	20.0	31.9	15.0	27.0
33089026	33089126	9.0 - 13.0	M25x1.5	25.0	37.7	15.0	29.0
33089028	33089128	9.0 - 16.0	M25x1.5	25.0	38.4	15.0	33.0
33089030	33089130	11.0 - 17.0	M25x1.5	25.0	37.7	15.0	29.0
33089032	33089132	13.0 - 18.0	M25x1.5	25.0	38.4	15.0	33.0
33089034	33089134	11.0 - 15.0	M32x1.5	32.0	42.3	15.0	36.0
33089035	33089135	12.0 - 20.0	M32x1.5	32.0	43.3	15.0	42.0
33089037	33089137	15.0 - 21.0	M32x1.5	32.0	42.3	15.0	36.0
33089038	33089138	18.0 - 25.0	M32x1.5	32.0	43.3	15.0	42.0
33089040	33089140	16.0 - 23.0	M40x1.5	40.0	47.4	18.0	46.0

** We recommend using the fitting with the smallest maximum diameter that will fit your application
** 我们建议您使用大线径范围的小规格接头以满足您的使用



Nylon PG, NPT and G Thread Cable Glands
尼龙 PG, NPT 和 G 螺纹电缆接头

- Protects and anchors cable at chassis entry
- Protects against ingress of water and dust

- 在安装面板接口处保护并固定电缆
- 防止水和灰尘进入

Specifications:
规格

RoHS ✓

Materials: Body & Sealing Nut - Nylon 6
Sealing Gland - Chloroprene
Sealing Washer - NBR
Flammability: UL94V-2
Operating temperature: Permanent -20 °C to 100 °C
Intermittent -30 °C to 150 °C
IP Rating: IP 68 (5 Bar, 30 min)

材料：接头和迫紧螺母 - 尼龙 6
密封圈 - 氯丁橡胶
密封垫片 - 丁腈橡胶
阻燃等级：UL94V-2
工作温度：持续温度 -20 °C to 100 °C
间歇温度 -30 °C to 150 °C
IP 等级：IP 68 (5 Bar, 30 min)

Part Number and Colour 零件号和颜色		** Diameter of Cables/Tubing to be Accommodated 管 / 线径范围	Part Dimensions 零件尺寸				
			Mounting Thread Type and Size 安装螺纹规格	Chassis Clearance Hole +0.3 / -0.0 光孔直径	Body and Sealing Nut 接头和迫紧螺母		
Black RAL 9005 黑色	Grey RAL 7035 浅灰色				H max.	TL	SW
PG Threads / PG 螺纹							
33089220	33089320	2.0 - 5.0	Pg 7	12.5	25.3	8.0	15.0
33089221	33089321	3.0 - 6.5	Pg 7	12.5	25.3	8.0	15.0
33089222	33089322	2.0 - 6.0	Pg 9	15.2	27.4	8.0	19.0
33089223	33089323	4.0 - 8.0	Pg 9	15.2	27.4	8.0	19.0
33089224	33089324	3.0 - 7.0	Pg 11	18.6	32.2	8.0	22.0
33089225	33089325	5.0 - 10.0	Pg 11	18.6	32.2	8.0	22.0
33089226	33089326	5.0 - 9.0	Pg 13.5	20.4	32.4	10.0	24.0
33089227	33089327	6.0 - 12.0	Pg 13.5	20.4	32.4	10.0	24.0
33089228	33089328	7.0 - 12.0	Pg 16	22.5	31.9	10.0	27.0
33089229	33089329	10.0 - 14.0	Pg 16	22.5	31.9	10.0	27.0
33089230	33089330	9.0 - 16.0	Pg 21	28.3	38.4	11.0	33.0
33089231	33089331	13.0 - 18.0	Pg 21	28.3	38.4	11.0	33.0
33089232	33089332	12.0 - 20.0	Pg 29	37.0	43.3	11.0	42.0
33089233	33089333	18.0 - 25.0	Pg 29	37.0	43.3	11.0	42.0
33089234	33089334	20.0 - 26.0	Pg 36	47.0	52.4	13.0	53.0
33089235	33089335	22.0 - 32.0	Pg 36	47.0	52.4	13.0	53.0
33089236	33089336	25.0 - 31.0	Pg 42	54.0	54.8	13.0	60.0
33089237	33089337	30.0 - 38.0	Pg 42	54.0	54.8	13.0	60.0
33089238	33089338	29.0 - 35.0	Pg 48	59.3	54.9	14.0	65.0
33089239	33089339	34.0 - 44.0	Pg 48	59.3	54.9	14.0	65.0
NPT Threads / NPT 螺纹							
33089200	33089300	3.0 - 7.0	3/8" NPT	17.2	32.2	15.0	22.0
33089201	33089301	5.0 - 10.0	3/8" NPT	17.2	32.2	15.0	22.0
33089202	33089302	5.0 - 9.0	1/2" NPT	21.3	32.4	15.0	24.0
33089203	33089303	6.0 - 12.0	1/2" NPT	21.3	32.4	15.0	24.0
33089204	33089304	7.0 - 12.0	1/2" NPT	21.3	31.9	15.0	27.0
33089205	33089305	10.0 - 14.0	1/2" NPT	21.3	31.9	15.0	27.0
33089206	33089306	9.0 - 16.0	3/4" NPT	26.7	38.4	15.0	33.0
33089207	33089307	13.0 - 18.0	3/4" NPT	26.7	38.4	15.0	33.0
33089208	33089308	12.0 - 20.0	1" NPT	33.4	43.3	18.0	42.0
33089209	33089309	18.0 - 25.0	1" NPT	33.4	43.3	18.0	42.0
G Threads / G 螺纹							
33089260	33089360	2.0 - 5.0	G 1/4"	13.2	25.3	10.0	15.0
33089261	33089361	3.0 - 6.5	G 1/4"	13.2	25.3	10.0	15.0
33089262	33089362	3.0 - 7.0	G 3/8"	16.7	32.2	11.0	22.0
33089263	33089363	5.0 - 10.0	G 3/8"	16.7	32.2	11.0	22.0
33089264	33089364	5.0 - 9.0	G 1/2"	21.0	32.4	10.0	24.0
33089265	33089365	6.0 - 12.0	G 1/2"	21.0	32.4	10.0	24.0
33089266	33089366	7.0 - 12.0	G 1/2"	21.0	31.9	11.0	27.0
33089267	33089367	10.0 - 14.0	G 1/2"	21.0	31.9	11.0	27.0
33089268	33089368	9.0 - 16.0	G 3/4"	26.4	38.4	12.0	33.0
33089269	33089369	13.0 - 18.0	G 3/4"	26.4	38.4	12.0	33.0
33089270	33089370	12.0 - 20.0	G 1"	33.3	43.3	13.0	42.0
33089271	33089371	18.0 - 25.0	G 1"	33.3	43.3	13.0	42.0

Approvals:
认证

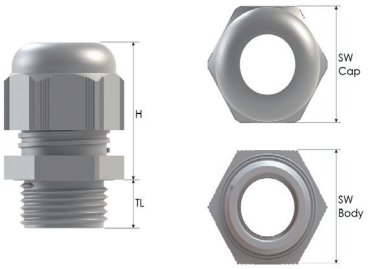

These cable glands are supplied complete with sealing washer and locknut.
该系列电缆接头提供装配好的密封垫片和安装固定螺母。

** We recommend using the fitting with the smallest maximum diameter that will fit your application
** 我们建议您使用大线径范围的小规格接头以满足您的使用

Tel: +86 512 6733 5586 or 6733 5583
Email: china@optimascomponents.com

Nylon Flex-Protecting Metric Thread Cable Glands - Standard & Elongated Threads
尼龙弯曲保护公制螺纹电缆接头 - 标准和加长型安装螺纹



Specifications:
规格

RoHS ✓

材料：接头和迫紧螺母 - 尼龙 6
密封圈 - 氯丁橡胶
密封垫片 - 丁腈橡胶
阻燃等级：UL94V-2
工作温度：持续温度 -20 °C to 100 °C
间歇温度 -30 °C to 150 °C
IP 等级：IP 68 (5 Bar, 30 min)

Materials: Body & Sealing Nut - Nylon 6
Sealing Gland - Chloroprene
Sealing Washer - NBR
Flammability: UL94V-2
Operating temperature: Permanent -20 °C to 100 °C
Intermittent -30 °C to 150 °C
IP Rating: IP 68 (5 Bar, 30 min)

- Protects and anchors cable at chassis entry
- Protects against ingress of water and dust
- Extension supports and prevents cable from bending sharply

- 在安装面板接口处保护并固定电缆
- 防止水和灰尘进入
- 延长支撑和防止电缆突然弯折

Approvals:
认证



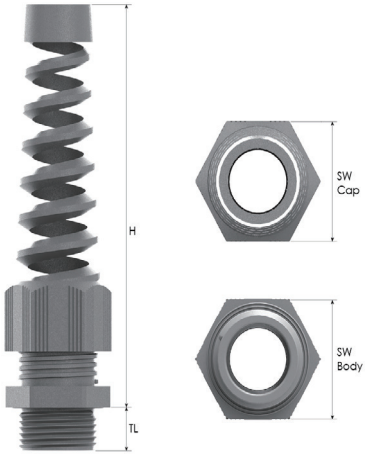

These cable glands are supplied complete with sealing washer and locknut.
该系列电缆接头提供装配好的
密封垫片和安装固定螺母。

Part Number and Colour 零件号和颜色		** Diameter of Cables/Tubing to be Accommodated 管 / 线径范围	Part Dimensions 零件尺寸				
			Mounting Thread Type and Size 安装螺纹规格	Chassis Clearance Hole +0.3 / -0.0 光孔直径	Body and Sealing Nut 接头和迫紧螺母		
Black RAL 9005 黑色	Grey RAL 7035 浅灰色				H max.	TL	SW
Standard Threads 标准安装螺纹							
33089500	33089600	2.0 - 5.0	M12x1.5	12.0	58.0	8.0	15.0
33089503	33089603	3.0 - 6.5	M12x1.5	12.0	58.0	8.0	15.0
33089506	33089606	3.0 - 7.0	M16x1.5	16.0	83.2	10.0	22.0
33089508	33089608	5.0 - 10.0	M16x1.5	16.0	83.2	10.0	22.0
33089510	33089610	5.0 - 9.0	M20x1.5	20.0	96.5	10.0	24.0
33089512	33089612	6.0 - 12.0	M20x1.5	20.0	96.5	10.0	24.0
33089514	33089614	7.0 - 12.0	M20x1.5	20.0	106.4	10.0	27.0
33089516	33089616	10.0 - 14.0	M20x1.5	20.0	106.4	10.0	27.0
33089518	33089618	9.0 - 16.0	M25x1.5	25.0	118.9	10.0	33.0
33089520	33089620	13.0 - 18.0	M25x1.5	25.0	118.9	10.0	33.0
Elongated Threads 加长安装螺纹							
33089502	33089602	2.0 - 5.0	M12x1.5	12.0	58.0	15.0	15.0
33089505	33089605	3.0 - 6.5	M12x1.5	12.0	58.0	15.0	15.0
33089507	33089607	3.0 - 7.0	M16x1.5	16.0	83.2	15.0	22.0
33089509	33089609	5.0 - 10.0	M16x1.5	16.0	83.2	15.0	22.0
33089511	33089611	5.0 - 9.0	M20x1.5	20.0	96.5	15.0	24.0
33089513	33089613	6.0 - 12.0	M20x1.5	20.0	96.5	15.0	24.0
33089515	33089615	7.0 - 12.0	M20x1.5	20.0	106.4	15.0	27.0
33089517	33089617	10.0 - 14.0	M20x1.5	20.0	106.4	15.0	27.0
33089519	33089619	9.0 - 16.0	M25x1.5	25.0	118.9	15.0	33.0
33089521	33089621	13.0 - 18.0	M25x1.5	25.0	118.9	15.0	33.0

** We recommend using the fitting with the smallest maximum diameter that will fit your application
** 我们建议您使用大线径范围的小规格接头以满足您的使用



Nylon Flex-Protecting PG, NPT and G Thread Cable Glands
尼龙弯曲保护 PG, NPT 和 G 螺纹电缆接头

- Protects and anchors cable at chassis entry
- Protects against ingress of water and dust
- Extension supports and prevents cable from bending sharply

- 在安装面板接口处保护并固定电缆
- 防止水和灰尘进入
- 延长支撑和防止电缆突然弯折

Specifications:
规格

RoHS ✓

Materials: Body & Sealing Nut - Nylon 6
Sealing Gland - Chloroprene
Sealing Washer - NBR
Flammability: UL94V-2
Operating temperature: Permanent -20 °C to 100 °C
Intermittent -30 °C to 150 °C
IP Rating: IP 68 (5 Bar, 30 min)

材料：接头和迫紧螺母 - 尼龙 6
密封圈 - 氯丁橡胶
密封垫片 - 丁腈橡胶
阻燃等级：UL94V-2
工作温度：持续温度 -20 °C to 100 °C
间歇温度 -30 °C to 150 °C
IP 等级：IP 68 (5 Bar, 30 min)

Part Number and Colour 零件号和颜色		** Diameter of Cables/Tubing to be Accommodated 管 / 线径范围	Part Dimensions 零件尺寸				
			Mounting Thread Type and Size 安装螺纹规格	Chassis Clearance Hole +0.3 / -0.0 光孔直径	Body and Sealing Nut 接头和迫紧螺母		
Black RAL 9005 黑色	Grey RAL 7035 浅灰色				H max.	TL	Wrenching Flats 扳手位尺寸
PG Threads / PG 螺纹							
33089560	33089660	2.0 - 5.0	Pg 7	12.5	58.0	8.0	15.0
33089561	33089661	3.0 - 6.5	Pg 7	12.5	58.0	8.0	15.0
33089562	33089662	2.0 - 6.0	Pg 9	15.2	68.4	8.0	19.0
33089563	33089663	4.0 - 8.0	Pg 9	15.2	68.4	8.0	19.0
33089564	33089664	3.0 - 7.0	Pg 11	18.6	83.2	8.0	22.0
33089565	33089665	5.0 - 10.0	Pg 11	18.6	83.2	8.0	22.0
33089566	33089666	5.0 - 9.0	Pg 13.5	20.4	96.5	10.0	24.0
33089567	33089667	6.0 - 12.0	Pg 13.5	20.4	96.5	10.0	24.0
33089568	33089668	7.0 - 12.0	Pg 16	22.5	106.4	10.0	27.0
33089569	33089669	10.0 - 14.0	Pg 16	22.5	106.4	10.0	27.0
33089570	33089670	9.0 - 16.0	Pg 21	28.3	118.9	11.0	33.0
33089571	33089671	13.0 - 18.0	Pg 21	28.3	118.9	11.0	33.0
NPT Threads / NPT 螺纹							
33089540	33089640	3.0 - 7.0	3/8" NPT	17.2	83.2	15.0	22.0
33089541	33089641	5.0 - 10.0	3/8" NPT	17.2	83.2	15.0	22.0
33089542	33089642	5.0 - 9.0	1/2" NPT	21.3	96.5	15.0	24.0
33089543	33089643	6.0 - 12.0	1/2" NPT	21.3	96.5	15.0	24.0
33089544	33089644	7.0 - 12.0	1/2" NPT	21.3	106.4	15.0	27.0
33089545	33089645	10.0 - 14.0	1/2" NPT	21.3	106.4	15.0	27.0
33089546	33089646	9.0 - 16.0	3/4" NPT	26.7	118.9	15.0	33.0
33089547	33089647	13.0 - 18.0	3/4" NPT	26.7	118.9	15.0	33.0
G Threads / G 螺纹							
33089580	33089680	3.0 - 7.0	G 3/8"	16.7	83.2	11.0	22.0
33089581	33089681	5.0 - 10.0	G 3/8"	16.7	83.2	11.0	22.0
33089582	33089682	5.0 - 9.0	G 1/2"	21.0	96.5	10.0	24.0
33089583	33089683	6.0 - 12.0	G 1/2"	21.0	96.5	10.0	24.0
33089584	33089684	7.0 - 12.0	G 1/2"	21.0	106.4	11.0	27.0
33089585	33089685	10.0 - 14.0	G 1/2"	21.0	106.4	11.0	27.0
33089586	33089686	9.0 - 16.0	G 3/4"	26.4	118.9	12.0	33.0
33089587	33089687	13.0 - 18.0	G 3/4"	26.4	118.9	12.0	33.0

** We recommend using the fitting with the smallest maximum diameter that will fit your application
** 我们建议您使用大线径范围的小规格接头以满足您的使用

Approvals:
认证

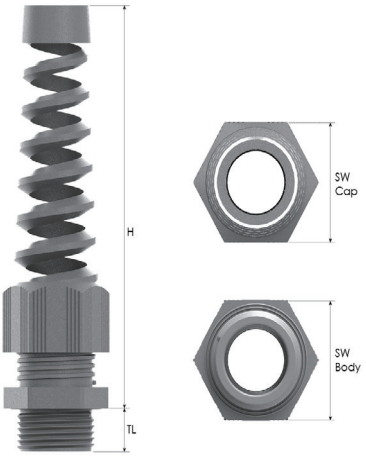

These cable glands are supplied complete with sealing washer and locknut.
该系列电缆接头提供装配好的密封垫片和安装固定螺母。

Tel: +86 512 6733 5586 or 6733 5583
Email: china@optimascomponents.com

Tight Weave Sleevings
密织型编织套管



Approvals:
认证：

FAR-25

FMVSS-302



Specifications: RoHS & Halogen Free ✓
规格： RoHS & 无卤 ✓

Material: PET
Flammability Rating: UL94V0, FAR-25, FMVSS-302
Temperature Rating: -70°C to 125°C Continuous
Melt Point: 250°C
Recommended Cutting: Hot Knife

材料：PET
阻燃等级：UL94V0, FAR-25, FMVSS-302
连续工作温度：-70°C 到 125°C
熔点：250°C
建议剪切工具：热切刀

- Complete coverage
- Economical and easy to install
- Medium abrasion resistance: material destroyed - 1,150 test cycles
- Resists UV(except neon colors), gasoline, engine chemicals and cleaning solvents

- 全面的包裹
- 经济且易于安装
- 中等耐磨性：材料在 1,150 个试验周期时损坏
- 抗紫外线（除了霓虹色），耐汽油、发动机化学品和清洗剂

Color Suffix Key / 颜色后缀代码：
-BK = Black / 黑色
-BNB = Black & Neon Blue / 黑色和霓虹蓝色
-BNR = Black & Neon Red / 黑色和霓虹红色
-BNO = Black and Neon Orange / 黑色和霓虹橙色
-BNY = Black and Neon Yellow / 黑色和霓虹黄色

To specify the required color, add this suffix to the end of the part numbers shown in the table:- i.e. 4203111-BK = Black 1/8" Tight Weave Sleeving
要指定所需颜色，请把后缀加到表中所示零件号的末尾 - 例如：4203111-BK = 黑色 1/8" 密织型编织套管

Part Number 零件号	Nominal Size 公称尺寸	Expansion Range 扩张范围		Pack Size 整卷长度（英尺 / 卷）	Available Colors 可选颜色
		Min 最小	Max 最大		
4203111	1/8"	1/16"	1/4"	1,000'	BNB, BNR, BNO, BNY, BK
4203112	1/4"	11/64"	11/32"	1,000'	BNB, BNR, BNO, BNY, BK
4203113	5/16"	1/4"	3/8"	1,000'	BNB, BNR, BNO, BNY, BK
4203114	1/2"	11/32"	5/8"	500'	BNB, BNR, BNO, BNY, BK
4203115	3/4"	1/2"	13/16"	250'	BNB, BNR, BNO, BNY, BK
4203116	1"	5/8"	1 1/8"	250'	BNB, BNR, BNO, BNY, BK
4203117	1 1/4"	1"	1 11/16"	250'	BNB, BNR, BNO, BNY, BK
4203118	1 1/2"	1 1/8"	2"	200'	BNB, BNR, BNO, BNY, BK
4203119	1 3/4"	1 1/2"	2 5/8"	200'	BNB, BNR, BNO, BNY, BK
4203120	2"	1 3/4"	3 1/8"	200'	BNB, BNR, BNO, BNY, BK
4203121	2 1/2"	2"	3 1/2"	100'	BNB, BNR, BNO, BNY, BK

ReMix Sleevings
ReMix 混色编织套管

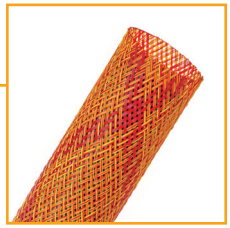

Approvals:
认证：

FAR-25

FMVSS-302



Specifications: RoHS & Halogen Free ✓
规格： RoHS & 无卤 ✓

Material: PET
Flammability Rating: UL94V0, FAR-25, FMVSS-302
Temperature Rating: -70°C to 125°C Continuous
Melt Point: 250°C
Recommended Cutting: Hot Knife

材料：PET
阻燃等级：UL94V0, FAR-25, FMVSS-302
连续工作温度：-70°C 到 125°C
熔点：250°C
建议剪切工具：热切刀

- Unique visual effect
- Expands up to 150%
- Economical and easy to install
- Medium abrasion resistance
- Resists UV, gasoline, engine chemicals and cleaning solvents

- 独特的视觉效果
- 最大可扩张至其直径的 150%
- 经济且易于安装
- 中等耐磨性
- 抗紫外线，耐汽油、发动机化学品和清洗剂

Color Suffix Key:
-DE = Denim **-FI = Fire** **-CA = Camo**
-DC = Desert Camo **-JU = Jungle**
颜色后缀代码：
-DE = 牛仔蓝 **-FI = 火焰红** **-CA = 迷彩绿**
-DC = 迷彩黄 **-JU = 丛林绿**

To specify the required color, add this suffix to the end of the part numbers shown in the table:- i.e. 4204111-DE= Denim 3/8" ReMix Sleeving
要指定所需颜色，请把后缀加到表中所示零件号的末尾 - 例如：4204111-DE= 牛仔蓝 3/8"Remix 混色编织套管

Part Number 零件号	Nominal Size 公称尺寸	Expansion Range 扩张范围		Pack Size 整卷长度（英尺 / 卷）	Available Colors 可选颜色
		Min 最小	Max 最大		
4204111	3/8"	1/4"	7/16"	500'	DE, FI, CA, DC, JU
4204112	1/2"	3/8"	5/8"	500'	DE, FI, CA, DC, JU
4204113	3/4"	5/8"	1 3/16"	250'	DE, FI, CA, DC, JU
4204114	1"	7/8"	1 1/2"	250'	DE, FI, CA, DC, JU
4204115	1 1/4"	1 1/8"	1 3/4"	250'	DE, FI, CA, DC, JU
4204116	1 1/2"	1 3/8"	2 3/8"	200'	DE, FI, CA, DC, JU

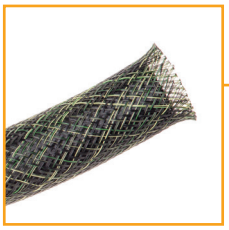

PrisMix Sleevings
PrisMix 混色编织套管

- Dual-colored monofilament
- Even more color possibilities
- Economical and easy to install
- Medium abrasion resistance
- Resists UV, gasoline, engine chemicals and cleaning solvents

- 双色单丝
- 更多的色彩可能性
- 经济且易于安装
- 中等耐磨性
- 抗紫外线，耐汽油、发动机化学品和清洗剂

Specifications: RoHS & Halogen Free ✓
规格: RoHS & 无卤 ✓

Material: PET
Flammability Rating: UL94V0, FAR-25, FMVSS-302
Temperature Rating: -70°C to 125°C Continuous
Melt Point: 250°C
Recommended Cutting: Hot Knife

材料：PET
阻燃等级：UL94V0, FAR-25, FMVSS-302
连续工作温度：-70°C 到 125°C
熔点：250°C
建议剪切工具：热切刀

Approvals:
认证:

FAR-25
FMVSS-302



Part Number 零件号	Nominal Size 公称尺寸	Expansion Range 扩张范围		Pack Size 整卷长度 (英尺 / 卷)	Available Colors 可选颜色
		Min 最小	Max 最大		
4205111	1/4”	1/8”	7/16”	1,000’	EM & TM
4205112	3/8”	3/16”	1/2”	500’	EM & TM
4205113	1/2”	1/4”	3/4”	500’	EM & TM
4205114	5/8”	3/8”	1”	500’	EM & TM
4205115	3/4”	1/2”	1 1/4”	250’	EM & TM
4205116	1”	5/8”	1 5/8”	250’	EM & TM
4205117	1 1/4”	3/4”	1 3/4”	250’	EM & TM
4205118	1 1/2”	1”	2 1/8”	200’	EM & TM
4205119	1 3/4”	1 1/4”	2 3/4”	200’	EM & TM

Color Suffix Key:
-EM = Expedition Mix **-TM = Trail Mix**
颜色后缀代码：
-EM = 远征组合 **-TM = 干果混搭**

To specify the required color, add this suffix to the end of the part numbers shown in the table:- i.e. 4205111-EM = Expedition Mix 1/4” PrisMix Sleeving
要指定所需颜色，请把后缀加到表中所示零件号的末尾 - 例如：4205111-EM = 远征组合 1/4” PrisMix 混色编织套管

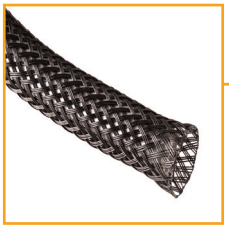

Heavy Wall Sleevings
厚壁编织套管

- 0.38mm monofilament diameter
- Extreme abrasion & cut resistance
- High abrasion resistance: material destroyed - 950 test cycles
- Resists UV, gasoline, solvents, salt water, and chemicals

- 0.38mm 单丝直径
- 极佳的耐磨性和耐切割性
- 高耐磨性：材料在 950 个试验周期时损坏
- 抗紫外线，耐汽油、溶剂、盐水和化学品

Specifications: RoHS & Halogen Free ✓
规格: RoHS & 无卤 ✓

Material: PET
Flammability Rating: UL94V0
Temperature Rating: -70°C to 125°C Continuous
Melt Point: 250°C
Recommended Cutting: Hot Knife

材料：PET
阻燃等级：UL94V0
连续工作温度：-70°C 到 125°C
熔点：250°C
建议剪切工具：热切刀

Approvals:
认证:



Part Number 零件号	Nominal Size 公称尺寸	Expansion Range 扩张范围		Pack Size 整卷长度 (英尺 / 卷)	Available Colors 可选颜色
		Min 最小	Max 最大		
4212111	1/8”	1/16”	3/16”	500’	BK
4212112	3/8”	3/16”	3/4”	500’	CL, CB & BK
4212113	5/8”	5/16”	7/8”	250’	CL, CB & BK
4212114	1”	1/2”	1 1/2”	250’	CL, CB & BK
4212115	1 1/2”	3/4”	2”	250’	CL, CB & BK
4212116	2”	1 1/2”	3”	200’	CL, CB & BK
4212117	3”	2”	4”	100’	CL, CB & BK
4212118	4”	2 1/2”	5 1/2”	100’	CL, CB & BK

Color Suffix Key:
-CL = Clear **-CB = Carbon** **-BK = Black**
颜色后缀代码：
-CL = 透明 **-CB = 碳黑色** **-BK = 黑色**

To specify the required color, add this suffix to the end of the part numbers shown in the table:- i.e. 4212111-BK = Black 1/8” Heavy Wall Sleeving
要指定所需颜色，请把后缀加到表中所示零件号的末尾 - 例如：4212111-BK = 黑色 1/8” 厚壁编织套管

Tel: +86 512 6733 5586 or 6733 5583
Email: china@optimascomponents.com

Aramid Armor Sleevings
Armor 芳纶编织套管

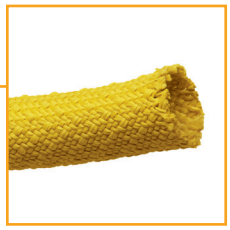



Specifications: RoHS & Halogen Free ✓
规格: RoHS & 无卤 ✓

Material: Kevlar Aramid Fiber
Temperature Rating: -170°C to 160°C Continuous
Recommended Cutting: Aramid Shear

材料：Kevlar 芳纶纤维
连续工作温度：-170°C 到 160°C
建议剪切工具：芳纶编织套管专用剪刀

- High Cut Resistance
- Light weight, High tensile strength
- Will not melt, burn, or support combustion
- Medium abrasion resistance: material destroyed - 700 test cycles
- Resists acids, bases, solvents, and fuels

- 耐切割性能好
- 质量轻，抗拉强度高
- 不会融化、燃烧或助燃
- 中等耐磨性：材料在 700 个试验周期时损坏
- 耐酸、碱、溶剂和燃料

Color Suffix Key:
-BK = Black **-YL = Yellow**
颜色后缀代码:
-BK = 黑色 **-YL** = 黄色

To specify the required color, add this suffix to the end of the part numbers shown in the table:- i.e. 4240110-BK = Black 1/8" Aramid Armor Sleeving
要指定所需颜色，请把后缀加到表中所示零件号的末尾 - 例如：4240110-BK = 黑色 1/8" Armor 芳纶编织套管

Part Number 零件号	Nominal Size 公称尺寸	Expansion Range 扩张范围		Pack Size 整卷长度 (英尺 / 卷)	Available Colors 可选颜色
		Min 最小	Max 最大		
4240110	1/8"	1/8"	1/4"	500'	BK
4240111	1/4"	1/4"	3/8"	500'	YL & BK
4240112	1/2"	1/2"	1"	250'	YL & BK
4240113	1"	1"	1 3/4"	200'	YL & BK
4240114	1 1/4"	1 1/4"	2"	125'	YL & BK

Insultherm Heavy Duty Sleevings
Insultherm 重型耐高温编织套管



Approvals:
认证:

VW-1



Specifications: RoHS & Halogen Free ✓
规格: RoHS & 无卤 ✓

Material: Acrylic Coated Fiberglass
Flammability Rating: UL VW-1
Temperature Rating: -70°C to 650°C Continuous
Melt Point: 1120°C
Recommended Cutting: Scissor

材料：丙烯酸涂层玻璃纤维
阻燃等级：UL VW-1
连续工作温度：-70°C 到 650°C
熔点：1120°C
建议剪切工具：剪刀

- Heavy weight braided fiberglass won't burn, melt, or become brittle
- Minimal dusting when cut & handled
- Cut and abrasion resistant
- Medium abrasion resistance
- Resists gasoline and engine chemicals

- 重质编织的玻璃纤维不会燃烧，熔化，或变脆
- 剪切和装配时低粉尘
- 耐切割和磨损
- 中等耐磨性
- 耐汽油和发动机化学品

Color Suffix Key:
-BK = Black
颜色后缀代码:
-BK = 黑色

To specify the required color, add this suffix to the end of the part numbers shown in the table:- i.e. 4244111-BK = Black 1/2" Insultherm Heavy Duty Sleeving
要指定所需颜色，请把后缀加到表中所示零件号的末尾 - 例如：4244111-BK = 黑色 1/2" Insultherm 重型耐高温编织套管

Part Number 零件号	Nominal Size 公称尺寸	Maximum Diameter 最大直径	Wall Thickness 壁厚	Pack Size 整卷长度 (英尺 / 卷)	Available Colors 可选颜色
4244111	1/2"	7/8"	.050"	200'	BK
4244112	3/4"	2 3/4"	.058"	200'	BK
4244113	1"	2 1/2"	.073"	200'	BK
4244114	1 1/4"	3 3/8"	.072"	100'	BK
4244115	1 3/8"	4 3/8"	.072"	100'	BK
4244116	1 1/2"	5 3/8"	.090"	100'	BK



ThermaShield Convoluted Sleevings
ThermaShield 卷曲式热屏蔽编织套管

- Designed to easily slip over wires or hoses, and bend in any direction needed
- Reflects radiant heat
- Insulates delicate wires and components
- Resists UV, gasoline and engine chemicals

- 电线或软管可轻易穿过，并可沿任意方向弯曲
- 反射辐射热
- 隔离精细的电缆和组件
- 抗紫外线，耐汽油和发动机化学品

Specifications: **RoHS & Halogen Free ✓**
规格: **RoHS & 无卤 ✓**

Material: Aluminum Laminated Fiberglass
Flammability Rating: Non-Flammable
Temperature Rating: -60°C to 255°C Continuous
Melt Point: 1120°C
Recommended Cutting: Scissor

材料：铝箔复合玻璃纤维
阻燃等级：不易燃
连续工作温度：-60°C 到 255°C
熔点：1120°C
建议剪切工具：剪刀



Part Number 零件号	Nominal Size 公称尺寸	Wall Thickness 壁厚	Pack Size (4' Pcs) 每盒数量（根）(4' 长 / 根)	Available Colors 可选颜色
4254511	3/8"	.045"	300	SV
4254512	1/2"	.045"	250	SV
4254513	5/8"	.045"	150	SV
4254514	3/4"	.045"	125	SV
4254515	7/8"	.045"	100	SV
4254516	1"	.045"	88	SV
4254517	1 1/4"	.045"	63	SV

Color Suffix Key:
-SV = Silver
颜色后缀代码：
-SV = 银色

To specify the required color, add this suffix to the end of the part numbers shown in the table:- i.e. 4254511-SV = Silver 3/8" ThermaShield Convoluted Sleeving
要指定所需颜色，请把后缀加到表中所示零件号的末尾 - 例如：4254511-SV = 银色 3/8" ThermaShield 卷曲式热屏蔽编织套管



ThermaShield Wrap Sleevings
ThermaShield 自粘式热屏蔽编织套管

- Designed to fit securely around existing assemblies and hard to reach components
- Reflects radiant heat
- Insulates delicate wires and components
- Resists UV, gasoline and engine chemicals

- 可紧密地贴合现成组件和难以触及的部件
- 反射辐射热
- 隔离精细的电缆和组件
- 抗紫外线，耐汽油和发动机化学品

Specifications: **RoHS & Halogen Free ✓**
规格: **RoHS & 无卤 ✓**

Material: Aluminum Laminated Fiberglass
Flammability Rating: Non-Flammable
Temperature Rating: -60°C to 255°C Continuous
Melt Point: 1120°C
Recommended Cutting: Scissor

材料：铝箔复合玻璃纤维
阻燃等级：不易燃
连续工作温度：-60°C 到 255°C
熔点：1120°C
建议剪切工具：剪刀



Part Number 零件号	Nominal Size 公称尺寸	Sheet Width 宽度	Wall Thickness 壁厚	Pack Size 整卷长度（英尺 / 卷）	Available Colors 可选颜色
4255111	1/2"	1 13/16"	.025"	200'	SV
4255112	3/4"	2 1/2"	.025"	200'	SV
4255113	1"	3 3/8"	.025"	200'	SV
4255114	1 1/4"	4 1/4"	.025"	200'	SV
4255115	1 1/2"	5"	.025"	200'	SV
4255116	1 3/4"	5 13/16"	.025"	100'	SV
4255117	2"	6 11/16"	.025"	100'	SV
4255118	2 1/4"	7 3/8"	.025"	100'	SV

Color Suffix Key:
-SV = Silver
颜色后缀代码：
-SV = 银色

To specify the required color, add this suffix to the end of the part numbers shown in the table:- i.e. 4255111-SV = Silver 1/2" ThermaShield Wrap Sleeving
要指定所需颜色，请把后缀加到表中所示零件号的末尾 - 例如：4255111-SV = 银色 1/2" ThermaShield 自粘式热屏蔽编织套管

Tel: +86 512 6733 5586 or 6733 5583
Email: china@optimascomponents.com

ThermaShield Flats
ThermaShield 自粘式热屏蔽编织布





Specifications: **RoHS & Halogen Free ✓**
规格： **RoHS & 无卤 ✓**

Material: Aluminum Laminated Fiberglass
Flammability Rating: Non-Flammable
Temperature Rating: -60°C to 255°C Continuous
Melt Point: 1120°C
Recommended Cutting: Scissor

材料：铝箔复合玻璃纤维
阻燃等级：不易燃
连续工作温度：-60°C 到 255°C
熔点：1120°C
建议剪切工具：剪刀

- Ideal solution for protecting delicate electronic component boxes mounted close to engines or other heat sources
- Reflects radiant heat
- Insulates delicate wires and components
- Resists gasoline and engine chemicals

- 非常适用于保护安装在发动机或其他热源附近的精密电子元件盒
- 反射辐射热
- 隔离精细的电缆和组件
- 耐汽油和发动机化学品

Color Suffix Key:
-SV = Silver
颜色后缀代码：
-SV = 银色

To specify the required color, add this suffix to the end of the part numbers shown in the table:- i.e. 4256111-SV = Silver 1" ThermaShield Flat
要指定所需颜色，请把后缀加到表中所示零件号的末尾 - 例如：4256111-SV = 银色 1" ThermaShield 自粘式热屏蔽编织布

Part Number 零件号	Nominal Size 公称尺寸	Wall Thickness 壁厚	Pack Size 整卷长度 (英尺 / 卷)	Available Colors 可选颜色
4256111	1"	.025"	250'	SV
4256112	1 1/2"	.025"	250'	SV
4256113	2"	.025"	250'	SV
4256114	3"	.025"	250'	SV
4256115	4"	.025"	250'	SV
4256116	5"	.025"	200'	SV
4256117	6"	.025"	100'	SV
4256118	6 7/8"	.025"	100'	SV

FireFlex Wrap Sleevings
FireFlex 自粘式防火编织套管





Specifications: **RoHS & Halogen Free ✓**
规格： **RoHS & 无卤 ✓**

Material: Silicone Coated Fiberglass
Flammability Rating: Non-Flammable
Temperature Rating: -54°C to 260°C Continuous
Melt Point: 1120°C
Recommended Cutting: Scissor

材料：硅胶涂层玻璃纤维
阻燃等级：不易燃
连续工作温度：-54°C 到 260°C
熔点：1120°C
建议剪切工具：剪刀

- Resists molten splash up to 1200°C
- Strong hook and loop closure
- Wrap around fire protection
- Resists UV, gasoline and engine chemicals

- 最高可耐 1200°C 的熔融飞溅
- 牢固的搭扣带封闭
- 环抱式的防火保护
- 抗紫外线，耐汽油和发动机化学品

Color Suffix Key:
-RD = Red
颜色后缀代码：
-RD = 红色

To specify the required color, add this suffix to the end of the part numbers shown in the table:- i.e. 4264111-RD = Red 1" FireFlex Wrap Sleeving
要指定所需颜色，请把后缀加到表中所示零件号的末尾 - 例如：4264111-RD = 红色 1" FireFlex 自粘式防火编织套管

Part Number 零件号	Nominal Size 公称尺寸	Wall Thickness 壁厚	Hook & Loop Width 搭扣带宽度	Pack Size 整卷长度 (英尺 / 卷)	Available Colors 可选颜色
4264111	1"	.045"	1"	150'	RD
4264112	1 1/2"	.045"	1"	150'	RD
4264113	2"	.045"	1"	150'	RD
4264114	2 1/2"	.045"	1"	150'	RD
4264115	3"	.045"	1"	150'	RD
4264116	3 1/2"	.045"	1"	150'	RD
4264117	4"	.045"	1"	150'	RD

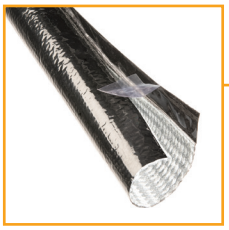

Liquid Wrap Sleevings
自粘式防水编织套管

- Water repellent when properly sealed
- Will not support growth of bacteria
- Extremely High abrasion resistance: material destroyed -10,338 test cycles
- Adhesive resists most cleaners and disinfectants

- 正确密封后可以防水
- 不支持细菌的生长
- 极高耐磨性：材料在 10,338 个试验周期时损坏
- 胶粘剂可耐大多数清洁剂和消毒剂

Specifications: **RoHS & Halogen Free ✓**
规格: **RoHS & 无卤 ✓**

Material: Laminated Polyester
Temperature Rating: -70°C to 125°C Continuous
Melt Point: 250°C
Recommended Cutting: Scissor

材料：复合聚酯
连续工作温度：-70°C 到 125°C
熔点：250°C
建议剪切工具：剪刀



Part Number 零件号	Nominal Size 公称尺寸	Wall Thickness 壁厚	Pack Size (8' Pcs) 每盒数量（根）(8' 长 / 根)	Available Colors 可选颜色
4268011	3/8"	.046"	125	BK
4268012	1/2"	.046"	125	BK
4268013	3/4"	.046"	60	BK
4268014	1"	.046"	44	BK
4268015	1 1/4"	.046"	30	BK

Color Suffix Key:
-BK = Black
颜色后缀代码：
-BK = 黑色

To specify the required color, add this suffix to the end of the part numbers shown in the table:- i.e. 4268011-BK = Black 3/8" Liquid Wrap Sleeving
要指定所需颜色，请把后缀加到表中所示零件号的末尾 - 例如：4268011-BK = 黑色 3/8" 自粘式防水编织套管



Nylon Monofilament Sleevings
尼龙单丝编织套管

- Braided from 0.30mm nylon 66 polyamide monofilament
- Commonly used in the automotive industry to protect hoses and wire harnesses from excessive wear
- High abrasion resistance: material destroyed - 1,200 test cycles
- Resists gasoline and engine chemicals

- 由 0.30mm 尼龙 66 聚酰胺单丝编织而成
- 常用于汽车行业保护软管和线束以免过度磨损
- 高耐磨性：材料在 1,200 个试验周期时损坏
- 耐汽油和发动机化学品

Specifications: **RoHS & Halogen Free ✓**
规格: **RoHS & 无卤 ✓**

Material: Nylon 66
Temperature Rating: -45°C to 150°C Continuous
Melt Point: 256°C
Recommended Cutting: Hot Knife

材料：尼龙 66
连续工作温度：-45°C 到 150°C
熔点：256°C
建议剪切工具：热切刀



Part Number 零件号	Nominal Size 公称尺寸	Expansion Range 扩张范围		Pack Size 整卷长度（英尺 / 卷）	Available Colors 可选颜色
		Min 最小	Max 最大		
4270111	1/8"	3/32"	1/4"	1,000'	BK
4270112	1/4"	1/8"	3/8"	1,000'	BK
4270113	3/8"	1/4"	7/16"	500'	BK
4270114	1/2"	3/8"	3/4"	500'	BK
4270115	5/8"	7/16"	1"	500'	BK
4270116	3/4"	1/2"	1 1/4"	250'	BK
4270117	1"	5/8"	1 3/8"	250'	BK
4270118	1 1/4"	3/4"	1 1/2"	250'	BK
4270119	1 1/2"	1"	2"	200'	BK
4270120	2"	1 1/2"	3"	200'	BK

Color Suffix Key:
-BK = Black
颜色后缀代码：
-BK = 黑色

To specify the required color, add this suffix to the end of the part numbers shown in the table:- i.e. 4270111-BK = Black 1/8" Nylon Monofilament Sleeving
要指定所需颜色，请把后缀加到表中所示零件号的末尾 - 例如：4270111-BK = 黑色 1/8" 尼龙单丝编织套管

Tel: +86 512 6733 5586 or 6733 5583
Email: china@optimascomponents.com

Reflex Sleevings
Reflex 反光编织套管

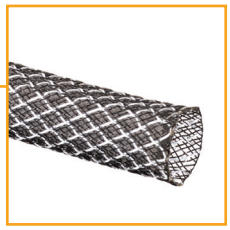



Specifications: **RoHS & Halogen Free ✓**
规格： **RoHS & 无卤 ✓**

Material: PET / 3M Scotchlite® Retroreflective Monofilament
Temperature Rating: -30°C to 125°C Continuous
Melt Point: 230°C
Recommended Cutting: Hot Knife

材料：PET / 3M Scotchlite® 逆向反光单丝
连续工作温度：-30°C 到 125°C
熔点：230°C
建议剪切工具：热切刀

- Provides high visibility safety on wires, hoses, cables, bicycle and motorcycle cables, stage wiring, and virtually anything else up to 675' away
- Reflective even under low light conditions
- Low abrasion resistance: material destroyed - 350 test cycles
- Resists UV, gasoline and engine chemicals

- 可在电线，软管，电缆，自行车和摩托车电缆，舞台布线以及最远 675' 以外的其他任何设备上提供高可见度和安全性
- 即使在低光照条件下也能反光
- 低耐磨性：材料在 350 个试验周期时损坏
- 抗紫外线，耐汽油和发动机化学品

Color Suffix Key:
-BK = Black **-CL** = Clear
颜色后缀代码：
-BK = 黑色 **-CL** = 透明

To specify the required color, add this suffix to the end of the part numbers shown in the table:- i.e. 4273111-BK = Black 1/8" Reflex Sleeving
要指定所需颜色，请把后缀加到表中所示零件号的末尾 - 例如：4273111-BK = 黑色 1/8" Reflex 反光编织套管

Part Number 零件号	Nominal Size 公称尺寸	Expansion Range 扩张范围		Pack Size 整卷长度 (英尺 / 卷)	Available Colors 可选颜色
		Min 最小	Max 最大		
4273111	1/8"	1/16"	1/4"	1,000'	CL
4273112	1/4"	3/16"	3/8"	1,000'	CL & BK
4273113	1/2"	1/4"	1"	500'	CL & BK
4273114	3/4"	3/8"	1 3/8"	250'	CL & BK

High Density Fine Thread (6 MIL) Sleevings
高密度细线编织套管





Specifications: **RoHS & Halogen Free ✓**
规格： **RoHS & 无卤 ✓**

Material: PET
Flammability Rating: UL94V0
Temperature Rating: -70°C to 125°C Continuous
Melt Point: 250°C
Recommended Cutting: Hot Knife

材料：PET
阻燃等级：UL94V0
连续工作温度：-70°C 到 125°C
熔点：250°C
建议剪切工具：热切刀

- 0.15mm(6 Mil) monofilament diameter
- Easy to engineer to unique specifications
- Economical, long lasting filtration solutions
- Low abrasion resistance

- 0.15mm(6 Mil) 单丝直径
- 易于设计为独特的规格
- 经济，持久的过滤解决方案
- 低耐磨性

Color Suffix Key:
-CL = Clear
颜色后缀代码：
-CL = 透明

To specify the required color, add this suffix to the end of the part numbers shown in the table:- i.e. 4283111-CL = Clear 1/8" High Density Fine Thread (6 MIL) Sleeving
要指定所需颜色，请把后缀加到表中所示零件号的末尾 - 例如：4283111-CL = 透明 1/8" 高密度细线编织套管

Part Number 零件号	Nominal Size 公称尺寸	Expansion Range 扩张范围		Pack Size 整卷长度 (英尺 / 卷)	Available Colors 可选颜色
		Min 最小	Max 最大		
4283111	1/8"	1/16"	1/2"	1,000'	CL
4283112	1/4"	3/16"	3/8"	1,000'	CL
4283113	5/16"	5/16"	7/16"	500'	CL
4283114	3/8"	5/16"	5/8"	500'	CL
4283115	1/2"	1/2"	3/4"	500'	CL
4283116	5/8"	1/2"	1"	250'	CL



Carbon Fiber Sleevings
碳纤维编织套管

- Ideal for strong, lightweight tubular structures
- Variety of diameters, wall thicknesses, and braid patterns
- Can be cut, drilled, sanded and tooled with commonly available power or hand tools
- Low abrasion resistance: material destroyed - 40 test cycles

- 非常适合坚固，轻质的管状结构
- 多种直径，壁厚和编织图案
- 可以使用常用的电动或手动工具进行切割，钻孔，打磨和加工
- 低耐磨性：材料在 40 个试验周期时损坏

Specifications: **RoHS & Halogen Free ✓**
规格: **RoHS &** 无卤 ✓

Material: PAN
Flammability Rating: Non-Flammable
Recommended Cutting: Scissor

材料：PAN
阻燃等级：不易燃
建议剪切工具：剪刀

Part Number 零件号	Nominal Size 公称尺寸	Wall Thickness 壁厚	Expansion Range 扩张范围		Pack Size 整卷长度 (英尺 / 卷)	Available Colors 可选颜色
			Min 最小	Max 最大		
Carbon Light / 轻型						
4285111	1/4”	.013”	1/8”	5/16”	500’	BK
4285112	1/2”	.013”	1/4”	5/8”	250’	BK
4285113	3/4”	.013”	5/16”	7/8”	250’	BK
4285114	1”	.013”	3/8”	1 1/16”	200’	BK
4285115	1 1/4”	.013”	1/2”	1 1/2”	125’	BK
4285116	1 1/2”	.013”	5/8”	1 3/4”	100’	BK
4285117	2”	.013”	3/4”	2 3/16”	100’	BK
Carbon Medium / 中型						
4285131	1/2”	.020”	1/4”	5/8”	250’	BK
4285132	3/4”	.020”	5/16”	7/8”	250’	BK
4285133	1”	.020”	7/16”	1 1/16”	200’	BK
4285134	1 1/4”	.020”	9/16”	1 1/2”	125’	BK
4285135	1 1/2”	.020”	3/4”	1 3/4”	100’	BK
4285136	2”	.020”	7/8”	2 3/16”	100’	BK
4285137	2 1/2”	.020”	1 1/16”	3”	100’	BK
Carbon Heavy / 重型						
4285151	3/4”	.030”	3/8”	7/8”	250’	BK
4285152	1”	.030”	1/2”	1 1/16”	200’	BK
4285153	1 1/4”	.030”	11/16”	1 1/2”	125’	BK
4285154	1 1/2”	.030”	13/16”	1 3/4”	100’	BK
4285155	2”	.030”	1”	2 3/16”	100’	BK
4285156	2 1/2”	.030”	1 1/4”	3”	100’	BK
4285157	3”	.030”	1 1/2”	3 1/2”	50’	BK

Color Suffix Key:
-BK = Black
颜色后缀代码：
-BK = 黑色

To specify the required color, add this suffix to the end of the part numbers shown in the table:- i.e. 4285111-BK = Black 1/4” Carbon Fiber Sleeving Light Type
要指定所需颜色，请把后缀加到表中所示零件号的末尾 - 例如：4285111-BK = 黑色 1/4” 碳纤维轻型编织套管





Tel: +86 512 6733 5586 or 6733 5583
Email: china@optimascomponents.com

Lacing Tapes
电缆束带



Specifications: **RoHS & Halogen Free ✓**
规格: **RoHS & 无卤 ✓**

Material: See table
Temperature Rating: Nylon: -55°C to 121°C
Polyester: -73°C to 177°C
Melting point: Nylon: 248°C
Polyester: 250°C

材料：见表格
工作温度：尼龙：-55°C 到 121°C
聚酯纤维：-73°C 到 177°C
熔点：尼龙：248°C
聚酯纤维：250°C

- A-A-52080 TYPE I - General purpose lacing tape
- A-A-52081 TYPE II - Superior knot tying properties to Nylon
  Suitable for aerospace/NASA applications
  High temperature performance

- A-A-52080 I 型 - 通用的电缆束带
- A-A-52081 II 型 - 比尼龙材料具有更优异的打结性能
  适用于航空航天 / NASA 应用
  耐高温性能

MIL Finishes:
A = No Finish
B = Wax
C = Synthetic Rubber
MIL 表面处理代码:
A = 无表面处理
B = 涂蜡
C = 合成橡胶涂层

Color Suffix Key:
-NT = Natural -BK = Black -RD = Red
颜色后缀代码:
-NT = 本色 **-BK** = 黑色 **-RD** = 红色

To specify the required color, add this suffix to the end of the part numbers shown in the table:- i.e. 4294106-BK = Black Size 1 A-A-52080 TYPE I Lacing Tape Wax
要指定所需颜色，请把后缀加到表中所示零件号的末尾 - 例如：4294106-BK = 黑色尺寸 1 A-A-52080 I 型电缆束带表面涂蜡

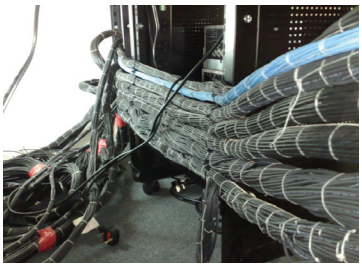

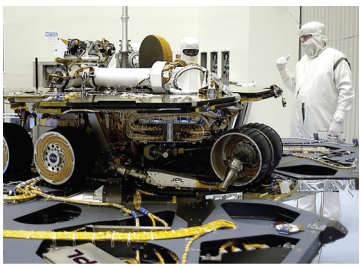

Part Number 零件号	Mil Spec Size 尺寸	Mil Spec Finish 表面处理代码	Width 宽度		Thickness 厚度		Pack Size 整卷长度 (英尺 / 卷)	Available Colors 可选颜色	Type/Material 类型 / 材料
			Min 最小	Max 最大	Min 最小	Max 最大			
4294101	1	A	.180”	.220”	.013”	.019”	750’	NT & BK	A-A-52080 TYPE I / Nylon A-A-52080 I 型 / 尼龙
4294102	2	A	.099”	.121”	.012”	.018”	750’	NT & BK	
4294103	3	A	.077”	.094”	.011”	.017”	1,500’	NT & BK	
4294104	4	A	.054”	.066”	.009”	.015”	1,500’	NT & BK	
4294105	5	A	.045”	.055”	.006”	.014”	1,500’	NT & BK	
4294106	1	B	.180”	.220”	.013”	.019”	750’	NT & BK	
4294107	2	B	.099”	.121”	.012”	.018”	750’	NT & BK	
4294108	3	B	.077”	.094”	.011”	.017”	1,500’	NT & BK	
4294109	4	B	.054”	.066”	.009”	.015”	1,500’	NT & BK	
4294110	5	B	.045”	.055”	.006”	.014”	1,500’	NT & BK	
4294111	1	C	.180”	.220”	.013”	.019”	750’	NT & BK	
4294112	2	C	.099”	.121”	.012”	.018”	750’	NT & BK	
4294113	3	C	.077”	.094”	.011”	.017”	1,500’	NT & BK	
4294114	4	C	.054”	.066”	.009”	.015”	1,500’	NT & BK	
4294115	5	C	.045”	.055”	.006”	.014”	1,500’	NT & BK	
4294121	1	A	.180”	.220”	.013”	.019”	750’	NT & BK	A-A-52081 TYPE II / Polyester A-A-52081 II 型 / 聚酯纤维
4294122	2	A	.099”	.121”	.012”	.018”	750’	NT & BK	
4294123	3	A	.077”	.094”	.011”	.017”	1,500’	NT & BK	
4294124	4	A	.054”	.066”	.009”	.015”	1,500’	NT & BK	
4294125	5	A	.045”	.055”	.006”	.014”	1,500’	NT & BK	
4294126	1	B	.180”	.220”	.013”	.019”	750’	NT, BK & RD	
4294127	2	B	.099”	.121”	.012”	.018”	750’	NT, BK & RD	
4294128	3	B	.077”	.094”	.011”	.017”	1,500’	NT, BK & RD	
4294129	4	B	.054”	.066”	.009”	.015”	1,500’	NT, BK & RD	
4294130	5	B	.045”	.055”	.006”	.014”	1,500’	NT, BK & RD	
4294131	1	C	.180”	.220”	.013”	.019”	750’	NT, BK & RD	
4294132	2	C	.099”	.121”	.012”	.018”	750’	NT, BK & RD	
4294133	3	C	.077”	.094”	.011”	.017”	1,500’	NT, BK & RD	
4294134	4	C	.054”	.066”	.009”	.015”	1,500’	NT, BK & RD	
4294135	5	C	.045”	.055”	.006”	.014”	1,500’	NT, BK & RD	



Cable Protection Solutions of Optimas
安普达的电缆保护解决方案

Optimas Solutions - Components Division (China) is working with premium suppliers to provide you the total solutions of your cable and wire protections in various applications, we can achieve your requirements whatever how tough the environment is, how complicate your applications are, we can always provide you a wide range of braided sleeving products for a variety of industries including biomedical, aerospace, tele-communication, computer, heavy truck and commercial vechical, marine and etc. Massive stocks of these braided sleeving products are standby to shorten the lead time, save your cost and reduce the risk.

安普达 - 零部件事业部（中国）与优质供应商合作致力于为您提供各种应用的电线和电缆保护的全面解决方案。无论环境多么严苛，应用多么复杂，我们都可以满足您的需求。我们可以为您提供各种编织套管产品用于各个行业，包括生物医学、航空航天、电信、计算机、重型卡车和商用车以及海洋运输等。我们常备大量各种编织套管的库存，以便缩短交期，节省您的库存成本并且降低库存风险。



If any further information on cable protection products, please call us on:
+86 512 6733 5586 or 6733 5583

如需了解关于电缆保护产品的更多信息，
请拨打我们的电话：
+86 512 6733 5586 或 6733 5583

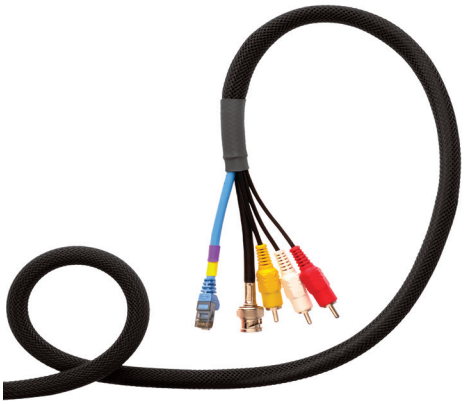



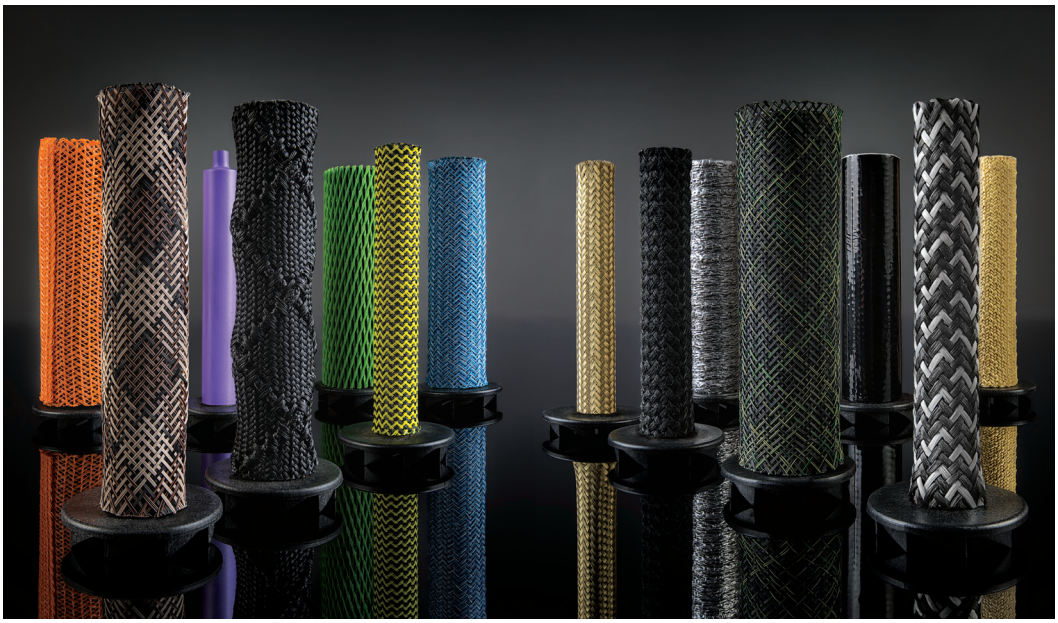



Tel: +86 512 6733 5586 or 6733 5583
Email: china@optimascomponents.com

Wire Saddles - Push-In
推入式固定线夹



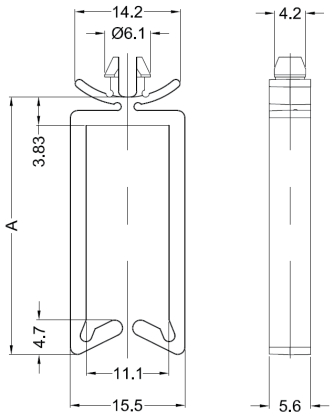

Specifications: 规格 — **RoHS ✓**

Material: Nylon 66
Colour: Natural

材料：尼龙 66
颜色：本色

- Manages & holds wires and cables
- 整理和固定电线及电缆

Part Number and Flammability 零件号和阻燃等级		Hole Size 安装孔径	Panel Thickness 面板厚度	A
UL94V-2	UL94V-0			
3621001	3621101	4.75	1.6	13.0
3621002	3621102	4.75	1.6	18.0
3621003	3621103	4.75	1.6	26.9
3621004	3621104	4.75	1.6	34.8

Wire Saddles - Arrow Mount
箭头式固定线夹



Specifications: 规格 — **RoHS ✓**

Material: Nylon 66

材料：尼龙 66

- Manages & holds wires and cables
- 整理和固定电线及电缆

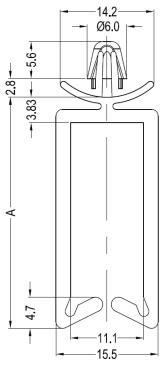

Fig.1 / 图 1

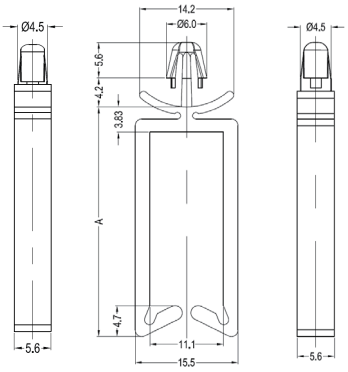

Fig.2 / 图 2

Part Number, Flammability and Colour 零件号，阻燃等级和颜色				Hole Size 安装孔径	Panel Thickness 面板厚度	A	Fig. 图
UL94V-2		UL94V-0					
Natural 本色	Black 黑色	Natural 本色	Black 黑色				
3621010	3621010-BK	3621110	3621110-BK*	4.75	1.6	13.0	1
3621011	3621011-BK	3621111	3621111-BK*	4.75	1.6	18.0	1
3621012	3621012-BK	3621112	3621112-BK*	4.75	1.6	26.9	1
3621013	3621013-BK	3621113	3621113-BK*	4.75	1.6	34.8	1
3622010	3622010-BK	3622110	3622110-BK*	4.75	3.2	13.0	2
3622011	3622011-BK	3622111	3622111-BK*	4.75	3.2	18.0	2
3622012	3622012-BK	3622112	3622112-BK*	4.75	3.2	26.9	2
3622013	3622013-BK	3622113	3622113-BK*	4.75	3.2	34.8	2

* Non-stock item, could be available subject to minimum order quantity
* 非库存产品，达到最小订货量可以供货

Micro Wire Saddles - Push-In
推入式微型固定线夹



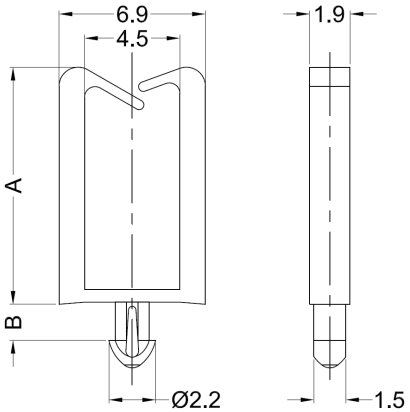

Specifications: 规格 — **RoHS ✓**

Material: Nylon 66

材料：尼龙 66

- Manages & holds wires and cables
- Low profile
- 整理和固定电线及电缆
- 外形较小

Part Number, Flammability and Colour 零件号，阻燃等级和颜色				Hole Size 安装孔径	Panel Thickness 面板厚度	A	B
UL94V-2		UL94V-0					
Natural 本色	Black 黑色	Natural 本色	Black 黑色				
3621036	3621036-BK*	3621136	3621136-BK	1.75	1.57	5.8	1.7
3621037	3621037-BK*	3621137	3621137-BK	1.75	1.6	11.2	1.7
3621038	3621038-BK*	3621138	3621138-BK	1.75	2.2	11.2	2.3
3621039	3621039-BK*	3621139	3621139-BK	1.75	2.36	5.8	2.45

* Non-stock item, could be available subject to minimum order quantity
* 非库存产品，达到最小订货量可以供货



Micro Wire Saddles - Arrow Mount
箭头式微型固定线夹

- Manages & holds wires and cables
- Low profile

- 整理和固定电线及电缆
- 外形较小

Specifications: 规格 — **RoHS ✓**

Material: Nylon 66

材料：尼龙 66

Part Number, Flammability and Colour 零件号，阻燃等级和颜色				Hole Size 安装孔径	Panel Thickness 面板厚度	A	B	C	D
UL94V-2		UL94V-0							
Natural 本色	Black 黑色	Natural 本色	Black 黑色						
3621020	3621020-BK	3621120	3621120-BK	3.0	1.6	7.3	6.7	9.1	3.0
3621021	3621021-BK	3621121	3621121-BK	3.0	1.6	9.1	8.2	10.8	3.9
3621022	3621022-BK	3621122	3621122-BK	3.0	1.6	11.2	9.4	12.0	6.0
3621023	3621023-BK	3621123	3621123-BK	3.0	1.6	13.0	9.4	12.0	7.7
3622020	3622020-BK	3622120	3622120-BK	3.0	2.4	7.3	6.7	9.1	3.0
3622021	3622021-BK	3622121	3622121-BK	3.0	2.4	9.1	8.2	10.8	3.9
3622022	3622022-BK	3622122	3622122-BK	3.0	2.4	11.2	9.4	12.0	6.0
3622023	3622023-BK	3622123	3622123-BK	3.0	2.4	13.0	9.4	12.0	7.7
3621030	3621030-BK	3621130	3621130-BK	3.5	1.6	7.3	6.7	9.1	3.0
3621031	3621031-BK	3621131	3621131-BK	3.5	1.6	9.1	8.2	10.8	3.9
3621032	3621032-BK	3621132	3621132-BK	3.5	1.6	11.2	9.4	12.0	6.0
3621033	3621033-BK	3621133	3621133-BK	3.5	1.6	13.0	9.4	12.0	7.7
3622030	3622030-BK	3622130	3622130-BK	3.5	2.4	7.3	6.7	9.1	3.0
3622031	3622031-BK	3622131	3622131-BK	3.5	2.4	9.1	8.2	10.8	3.9
3622032	3622032-BK	3622132	3622132-BK	3.5	2.4	11.2	9.4	12.0	6.0
3622033	3622033-BK	3622133	3622133-BK	3.5	2.4	13.0	9.4	12.0	7.7

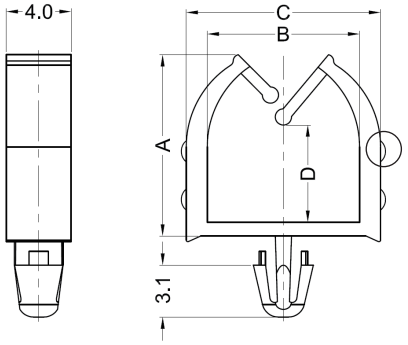

Slight ribs may appear on parts when A=7.3
当 A = 7.3 时，产品上可能会有一些微小的加强筋





Lockable Wire Saddles
扣锁式固定线夹

- Can lock and remove cables easily

- 固定和取出电缆都很容易

Specifications: 规格 — **RoHS ✓**

Material: Nylon 66

材料：尼龙 66

Part Number, Flammability and Colour 零件号，阻燃等级和颜色				Hole Size 安装孔径	Panel Thickness 面板厚度	A	B	Fig. 图
UL94V-2		UL94V-0						
Natural 本色	Black 黑色	Natural 本色	Black 黑色					
3621040	3621040-BK*	3621140	3621140-BK*	4.75	1.6	13.0	-	1
3621041	3621041-BK*	3621141	3621141-BK*	4.75	1.6	18.0	-	1
3621042	3621042-BK*	3621142	3621142-BK*	4.75	1.6	27.2	-	1
3621043	3621043-BK*	3621143	3621143-BK*	4.75	1.6	35.1	-	1
3622040	3622040-BK	3622140	3622140-BK*	4.75	1.6	13.0	8.4	2
3622041	3622041-BK	3622141	3622141-BK*	4.75	1.6	18.0	8.4	2
3622042	3622042-BK	3622142	3622142-BK*	4.75	1.6	27.2	8.4	2
3622043	3622043-BK	3622143	3622143-BK*	4.75	1.6	35.1	8.4	2
3623040	3623040-BK	3623140	3623140-BK*	4.75	3.2	13.0	9.6	2
3623041	3623041-BK	3623141	3623141-BK*	4.75	3.2	18.0	9.6	2
3623042	3623042-BK	3623142	3623142-BK*	4.75	3.2	27.2	9.6	2
3623043	3623043-BK	3623143	3623143-BK*	4.75	3.2	35.1	9.6	2

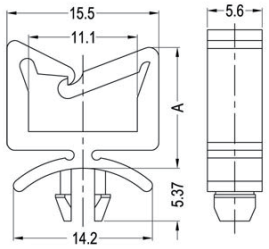

Fig.1 / 图 1

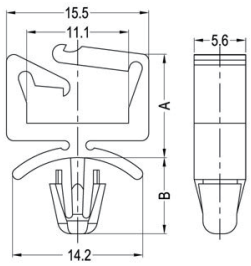

Fig.2 / 图 2

* Non-stock item, could be available subject to minimum order quantity
* 非库存产品，达到最小订货量可以供货

Tel: +86 512 6733 5586 or 6733 5583
Email: china@optimascomponents.com

Wire Saddles - Side Entry
侧入式固定线夹



Fig.1 / 图 1

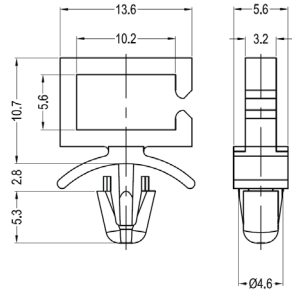

Fig.2 / 图 2

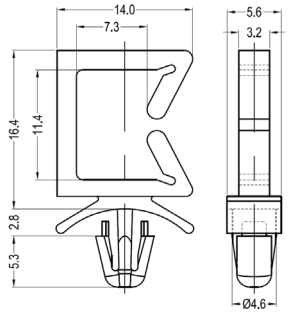

Specifications: 规格 — **RoHS ✓**

Material: Nylon 66

材料：尼龙 66

- Manages & holds wires and cables
- Side entry provides low profile and ideal for where the space is limited
- 整理和固定电线及电缆
- 侧入式高度低，适用于安装空间有限的场合

Part Number, Flammability and Colour 零件号，阻燃等级和颜色				Hole Size 安装孔径	Panel Thickness 面板厚度	Fig. 图
UL94V-2		UL94V-0				
Natural 本色	Black 黑色	Natural 本色	Black 黑色			
3621050	3621050-BK	3621150	3621150-BK	4.8	1.6	1
3622050	3622050-BK	3622150	3622150-BK	4.8	1.6	2

Wire Saddles - Quarter Turn
直角旋转式固定线夹

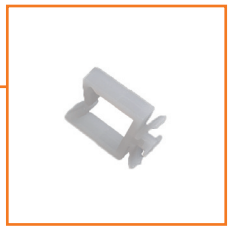

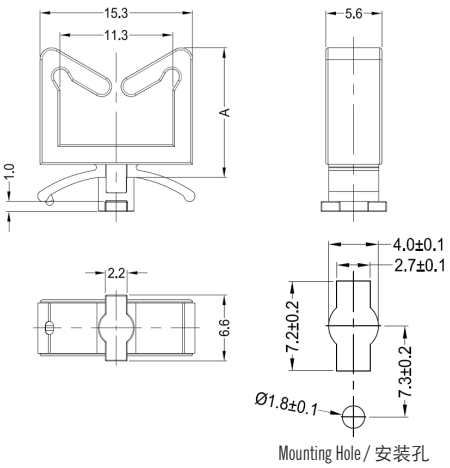

Mounting Hole / 安装孔

Specifications: 规格 — **RoHS ✓**

Material: Nylon 66
Colour: Natural

材料：尼龙 66
颜色：本色

- Manages & holds wires and cables
- 整理和固定电线及电缆

Part Number and Flammability 零件号和阻燃等级		Panel Thickness 面板厚度	A
UL94V-2	UL94V-0		
3621060	3621160	0.8 - 1.6	13.0
3621061	3621161	0.8 - 1.6	17.8
3621062	3621162	0.8 - 1.6	26.9
3621063	3621163	0.8 - 1.6	34.8

Wire Saddles - Fir Tree Mount
树形固定线夹



Fig.1 / 图 1

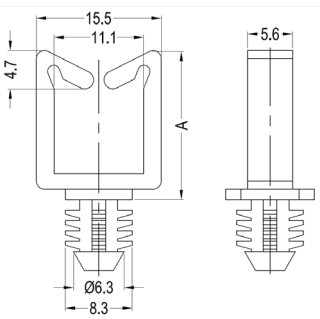

Fig.2 / 图 2

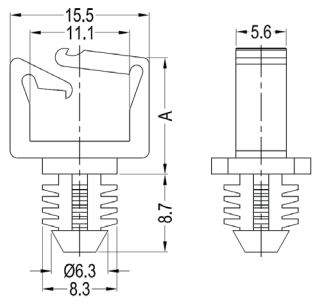

Specifications: 规格 — **RoHS ✓**

Material: Nylon 66

材料：尼龙 66

- Manages & holds wires and cables
- Designed for mounting in blind holes
- 整理和固定电线及电缆
- 设计用于安装在盲孔中

Part Number, Flammability and Colour 零件号，阻燃等级和颜色				Hole Size 安装孔径	Panel Thickness 面板厚度	A	Fig. 图
UL94V-2		UL94V-0					
Natural 本色	Black 黑色	Natural 本色	Black 黑色				
3621065	3621065-BK	3621165	3621165-BK*	7.9	6.4	13.0	1
3621066	3621066-BK	3621166	3621166-BK*	7.9	6.4	18.3	1
3621067	3621067-BK	3621167	3621167-BK*	7.9	6.4	27.2	1
3621068	3621068-BK	3621168	3621168-BK*	7.9	6.4	35.6	1
3622065	3622065-BK*	3622165	3622165-BK*	7.9	6.4	13.0	2
3622066	3622066-BK*	3622166	3622166-BK*	7.9	6.4	18.0	2
3622067	3622067-BK*	3622167	3622167-BK*	7.9	6.4	27.2	2
3622068	3622068-BK*	3622168	3622168-BK*	7.9	6.4	35.2	2

* Non-stock item, could be available subject to minimum order quantity
* 非库存产品，达到最小订货量可以供货



Wire Saddles - Lockable Entry
锁扣式边框固定线夹

- Push mount assembly with finger tip pressure
- Protects wires from sharp edges
- 用手按压即可安装
- 保护电缆免受锋利边缘的划伤

Specifications: RoHS ✓
规格

Material: Nylon 66
Colour: Natural

材料：尼龙 66
颜色：本色

Part Number and Flammability 零件号和阻燃等级		Panel Thickness 面板厚度	A	Fig. 图
UL94V-2	UL94V-0			
3621070	3621170	0.5 - 1.6	-	1
3622070	3622170	0.8 - 1.6	25.0	2
		2.0	26.0	2

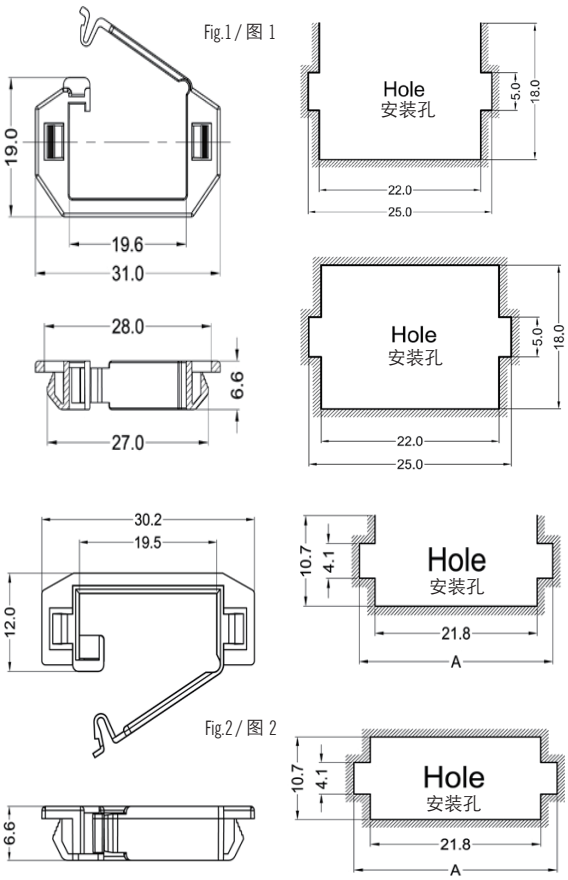



Wire Saddles - Top Entry
顶入式边框固定线夹

- Releasable and reusable for easy wire bundling
- Protects wires from sharp edges
- 可松开和重复利用，便于电线捆扎
- 保护电缆免受锋利边缘的划伤

Specifications: RoHS ✓
规格

Material: Nylon 66
Colour: Natural

材料：尼龙 66
颜色：本色

Part Number and Flammability 零件号和阻燃等级		Panel Thickness 面板厚度	Fig. 图
UL94V-2	UL94V-0		
3621075	3621175	0.8 - 1.6	1
3622075	3622175	0.8 - 1.6	2
3623075	3623175	0.8 - 1.6	3
3624075	3624175	0.8 - 1.6	4

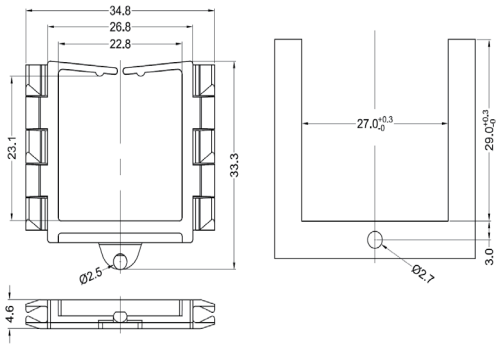

Fig.4 / 图 4

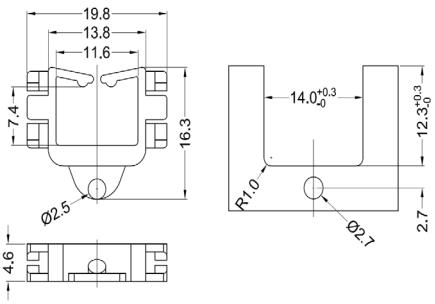

Fig.1 / 图 1

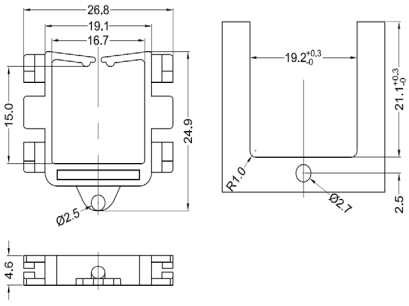

Fig.2 / 图 2

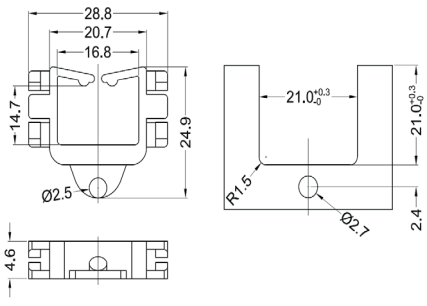

Fig.3 / 图 3

Tel: +86 512 6733 5586 or 6733 5583
Email: china@optimascomponents.com

Self-Adhesive Cable Clips
背胶线夹



Specifications: RoHS ✓
规格

Material: Nylon 66
Flammability Rating: UL94V2

材料：尼龙 66
阻燃等级：UL94V2

- Double-sided adhesive tape backing allows mounting in position desired
- 底部的背胶使其能够安装在任何位置

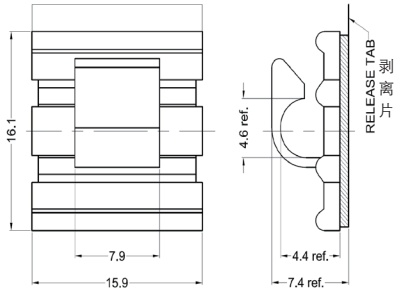

Fig.1 / 图 1

Part Number and Colour 零件号和颜色		Adhesive Tape Dimensions 背胶尺寸	Fig. 图
Natural 本色	Black 黑色		
3621076	3621076-BK	15.5 x 15.5 x 1.0	1
3622076	3622076-BK*	19.0 x 19.0 x 1.0	2
3623076	3623076-BK*	25.0 x 25.0 x 1.0	3
3624076	3624076-BK*	25.0 x 25.0 x 1.0	4

* Non-stock item, could be available subject to minimum order quantity
* 非库存产品，达到最小订货量可以供货

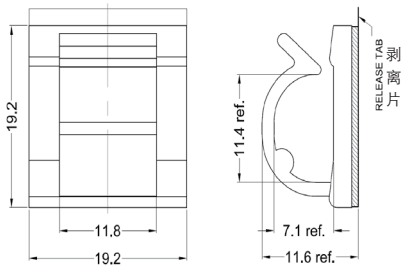

Fig.2 / 图 2

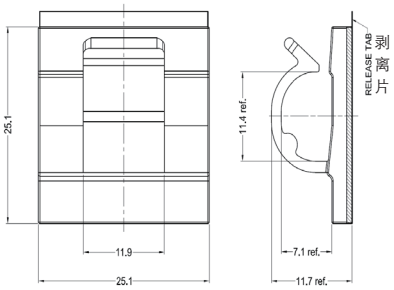

Fig.3/ 图 3

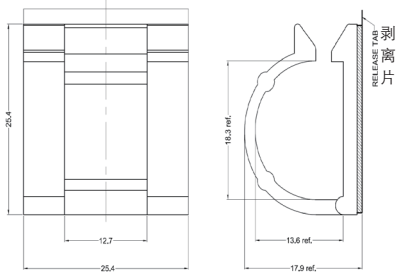

Fig.4 / 图 4

Self-Adhesive Micro Wire Saddles - Side Entry
侧入式背胶微型线夹



Specifications: RoHS ✓
规格

Material: Nylon 66 材料：尼龙 66
Colour: Natural 颜色：本色

- Self adhesive base for secure surface mount
- Side entry provides low profile and ideal for where the space is limited
- 带备胶底座可以牢固地贴在表面
- 侧入式高度低，适用于安装空间有限的场合

Part Number and Flammability 零件号和阻燃等级		A	Adhesive Tape Dimensions 背胶尺寸
UL94V-2	UL94V-0		
3621077	3621177	12.7	12.5 x 12.5 x 1.0
3622077	3622177	9.5	9.3 x 12.5 x 1.0

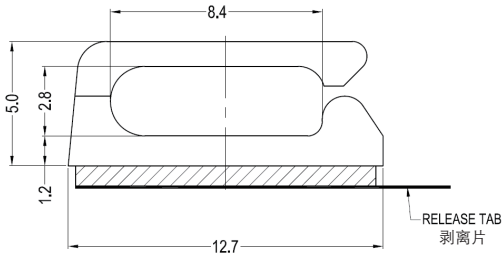

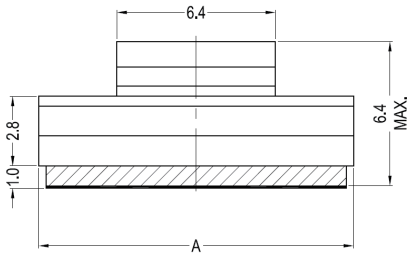



Self-Adhesive Micro Wire Saddles - Top Entry
顶入式背胶微型线夹

- Double-sided adhesive tape backing allows mounting in position desired
- 底部的背胶使其能够安装在任何位置

Specifications 规格	RoHS ✓
Material: Nylon 66	材料：尼龙 66
Colour: Natural	颜色：本色

Part Number and Flammability 零件号和阻燃等级		A	B	C	D	E	F	G	Adhesive Tape Dimensions 背胶尺寸	Fig. 图
UL94V-2	UL94V-0									
3621080	3621180	4.2	1.0	7.1	4.6	1.5	2.0	9.4	9.3 x 9.3 x 1.0	1
3621081	3621181	6.0	2.8	7.1	4.6	1.5	2.0	9.4	9.3 x 9.3 x 1.0	1
3621082	3621182	7.4	3.2	9.1	6.4	2.0	4.0	12.7	12.5 x 12.5 x 1.0	1
3621083	3621183	9.1	4.1	10.7	7.9	2.0	4.0	12.7	12.5 x 12.5 x 1.0	1
3621084	3621184	11.3	6.1	11.9	8.9	2.0	4.0	12.7	12.5 x 12.5 x 1.0	1
3621085	3621185	12.9	7.9	11.9	8.9	2.0	4.0	12.7	12.5 x 12.5 x 1.0	1
3621086	3621186	-	-	-	-	-	-	-	9.3 x 9.3 x 1.0	2

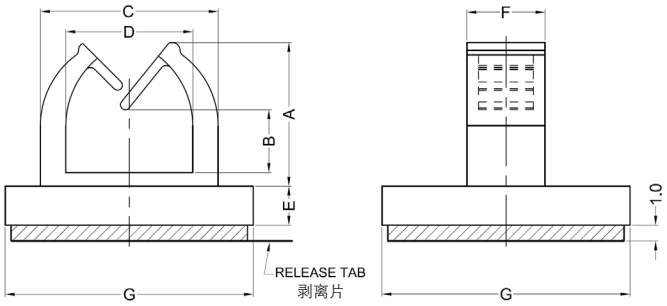

Fig.1 / 图 1

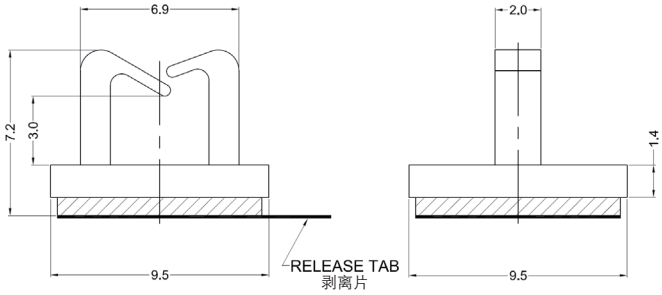

Fig.2 / 图 2



Adjustable Cable Clips - Self-Adhesive
可调式背胶线夹

- Ratcheting system allows adjustment stages, letting you tighten to the diameter of the wiring bundle
- One-touch ratchet lock release makes maintenance simple
- Double-sided adhesive tape backing allows mounting in position desired
- 棘齿式结构可以进行调整，可按照线束直径对其夹紧
- 一键式棘齿锁定释放结构便于维护
- 底部的背胶使其能够安装在任何位置

Specifications: 规格	RoHS ✓
Material: Nylon 66	
Colour: Natural	
Flammability Rating: UL94V2	
材料：尼龙 66	
颜色：本色	
阻燃等级：UL94V2	

Part Number 零件号	Bundle Diameter 夹持线径	A	B	C	D	E	Adhesive Tape Dimensions 背胶尺寸	Fig. 图
3621090	5.5 - 6.5	21.6	16.5	18.0	10.0	-	21.0 x 16.0 x 1.0	1
3621091	7.9 - 10.3	25.4	19.1	22.0	10.2	9.0	25.4 x 19.0 x 1.0	2
3621092	11.9 - 14.3	31.5	19.1	27.7	10.2	10.0	31.5 x 19.0 x 1.0	2
3621093	14.7 - 19.1	38.1	19.1	32.8	12.7	12.0	38.1 x 19.0 x 1.0	2
3621094	22.2 - 25.4	50.5	25.4	44.5	12.7	-	50.5 x 25.0 x 1.0	2
3622090	5.5 - 6.5	21.6	16.5	18.0	10.0	-	Without Tape / 没有背胶	1
3622091	7.9 - 10.3	25.4	19.1	22.0	10.2	9.0	Without Tape / 没有背胶	2
3622092	11.9 - 14.3	31.5	19.1	27.7	10.2	10.0	Without Tape / 没有背胶	2
3622093	14.7 - 19.1	38.1	19.1	32.8	12.7	12.0	Without Tape / 没有背胶	2
3622094	22.2 - 25.4	50.5	25.4	44.5	12.7	16.0	Without Tape / 没有背胶	2

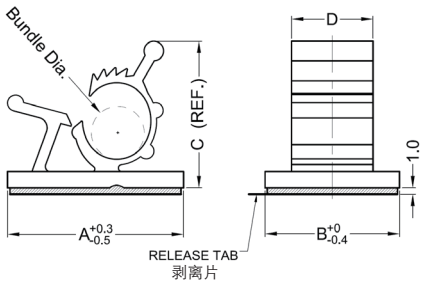

Fig.1 / 图 1

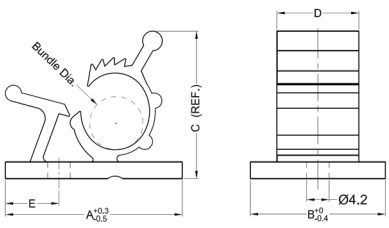

Fig.2 / 图 2

Tel: +86 512 6733 5586 or 6733 5583
Email: china@optimascomponents.com

Wire Saddles - Snap Rivet Mount
铆钉安装线夹

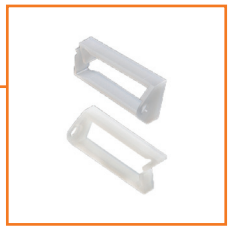

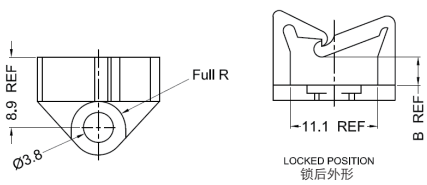

Specifications: RoHS ✓
规格

Material: Nylon 66
Colour: Natural

材料：尼龙 66
颜色：本色

- Designed for mounting easily on chassis with a snap rivet or M3.5/#6 screw
- 用压入式铆钉或 M3.5/#6 的螺钉即可轻松安装在面板上

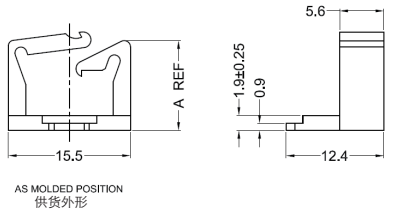

Fig.1 / 图 1

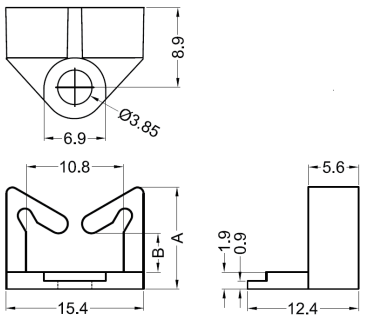

Fig.2 / 图 2

Part Number and Flammability 零件号和阻燃等级		Hole Size 安装孔径	A	B	Fig. 图
UL94V-2	UL94V-0				
3621095	3621195	3.6 - 3.7	11.4	3.6	1
3621096	3621196	3.6 - 3.7	16.3	8.6	1
3621097	3621197	3.6 - 3.7	25.4	18.3	1
3621098	3621198	3.6 - 3.7	33.3	25.4	1
3622095	3622195	3.6 - 3.7	11.4	4.4	2
3622096	3622196	3.6 - 3.7	16.3	9.3	2
3622097	3622197	3.6 - 3.7	25.4	18.4	2
3622098	3622198	3.6 - 3.7	33.5	26.4	2

Round Wire Saddles - Arrow Mount
箭头式环形线夹



Specifications: RoHS ✓
规格

Material: Nylon 66
材料：尼龙 66

- Manages & holds cables and wires
- 整理和固定电线及电缆

Part Number, Flammability and Colour 零件号，阻燃等级和颜色				Hole Size 安装孔尺寸	Panel Thickness 面板厚度	Fig. 图
UL94V-2		UL94V-0				
Natural 本色	Black 黑色	Natural 本色	Black 黑色			
3661001	3661001-BK	3661101	3661101-BK*	6.35 square / 方孔	0.76 - 1.52	1
3662001	3662001-BK	3662101	3662101-BK*	6.35 square / 方孔	1.47 - 2.54	2

* Non-stock item, could be available subject to minimum order quantity
* 非库存产品，达到最小订货量可以供货

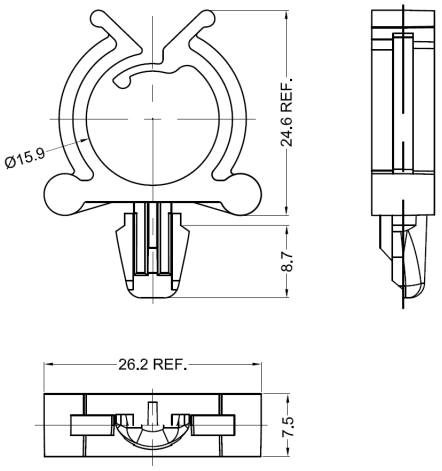

Fig.1 / 图 1

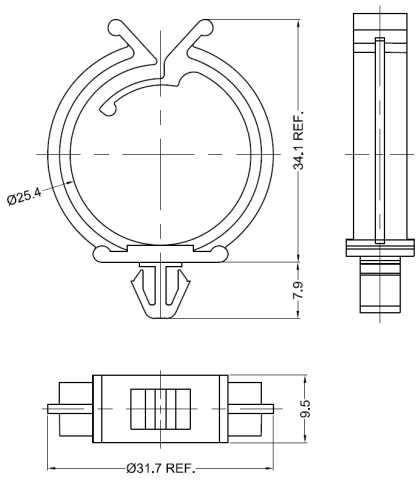

Fig.2 / 图 2



Round Wire Saddles - Self-Adhesive
背胶式环形线夹

- Manages & holds cables and wires
- Double-sided adhesive tape backing allows mounting in position desired

- 整理和固定电线及电缆
- 底部的背胶使其能够安装在任何位置

Specifications: 规格 — **RoHS ✓**

Material: Nylon 66
Colour: Natural
Flammability Rating: UL94V2

材料：尼龙 66
颜色：本色
阻燃等级：UL94V2

Part Number 零件号	Adhesive Tape Dimensions 背胶尺寸
3661002	25.0 x 25.0 x 1.0
3662002	Without Tape / 没有背胶

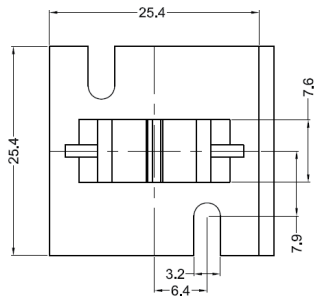

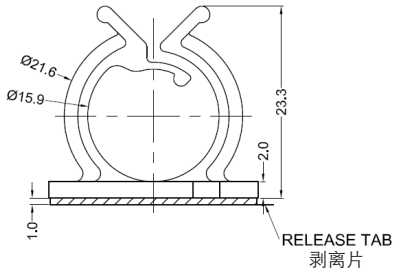



Flat Cable Clamps - Snap-In
压入式扁平线夹

- Low profile
- Designed for holding flat cable

- 高度低
- 用于固定扁平电缆

Specifications: 规格 — **RoHS ✓**

Material: Nylon 66

材料：尼龙 66

Part Number, Flammability and Colour 零件号，阻燃等级和颜色				Panel Thickness 面板厚度
UL94V-2		UL94V-0		
Natural 本色	Black 黑色	Natural 本色	Black 黑色	
3661003	3661003-BK	3661103	3661103-BK	0.8 - 1.6

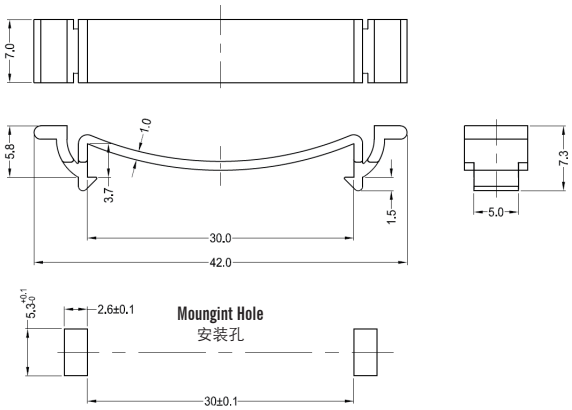



Spring Clips - Screw Mount
螺丝固定式弹性线夹

- Fix with a M3.5/#6 screw
- Flexible to remove the cable without removing the clip
- All inside edges are radiused for product protection

- 用 M3.5/#6 的螺钉进行安装
- 具有弹性，可以在不拆除线夹的情况下取出电缆
- 全部采用圆弧内边来保护产品

Specifications: 规格 — **RoHS ✓**

Material: Nylon 66
Colour: Natural

材料：尼龙 66
颜色：本色

Part Number and Flammability 零件号和阻燃等级		D
UL94V-2	UL94V-0	
3661004	3661104	3.9
3661005	3661105	4.1

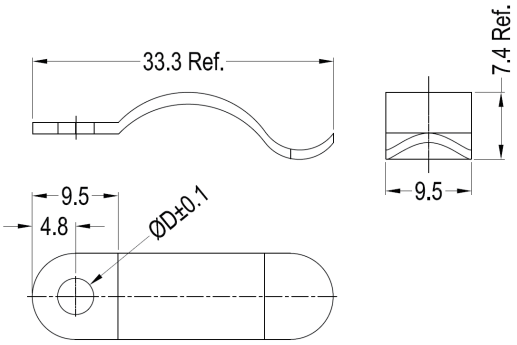

Tel: +86 512 6733 5586 or 6733 5583
Email: china@optimascomponents.com

Twist-Lock Cable Clips
扭线环



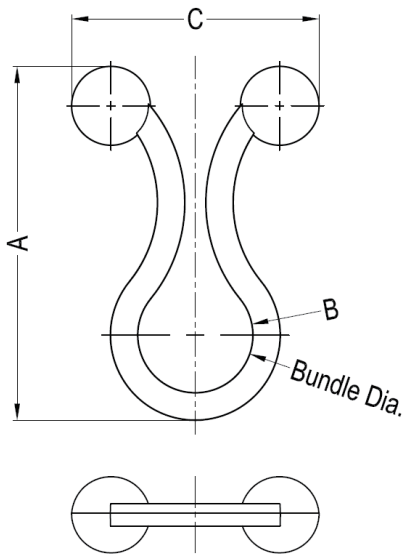

Specifications: RoHS ✓
规格

Material: Nylon 66

材料：尼龙 66

- Releasable and reusable for easy wire bundling
- Locking ends "twist" into place with fingertip pressure
- 可松开和重复使用，便于电线捆扎
- 用手指将末端锁扣"扭结"到位即可

Part Number, Flammability and Colour 零件号，阻燃等级和颜色				Bundle Diameter 夹持线径	A	B	C
UL94V-2		UL94V-0					
Natural 本色	Black 黑色	Natural 本色	Black 黑色				
3661010	3661010-BK	3661110	3661110-BK*	5.1 - 7.6	22.9	6.35	17.9
3661011	3661011-BK*	3661111*	3661111-BK*	7.6 - 10.2	25.6	8.3	17.9
3661012	3661012-BK	3661112	3661112-BK*	10.2 - 12.7	30.5	11.4	19.0
3661013	3661013-BK	3661113	3661113-BK	25.4 max. / 最大	43.4	24.0	19.7

* Non-stock item, could be available subject to minimum order quantity
* 非库存产品，达到最小订货量可以供货

Curly-Lock Cable Clips
扭线环



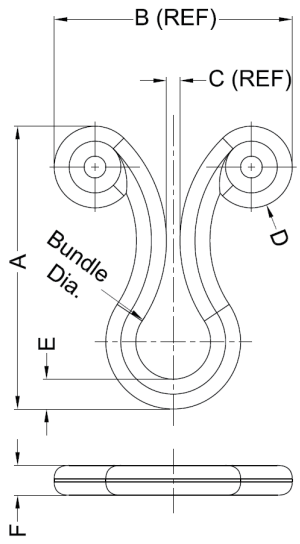

Specifications: RoHS ✓
规格

Material: Nylon 66
Colour: Natural
Flammability Rating: UL94V2

材料：尼龙 66
颜色：本色
阻燃等级：UL94V2

- Releasable and reusable for easy wire bundling
- Locking ends "twist" into place with fingertip pressure
- 可松开和重复使用，便于电线捆扎
- 用手指将末端锁扣"扭结"到位即可

Part Number 零件号	Bundle Diameter 夹持线径	A	B	C	D	E	F
3661020	3.2 - 3.8	12.2	9.5	0.6	3.5	1.4	1.4
3661021	4.1 - 6.1	20.8	17.5	1.0	6.0	2.2	2.2
3661022	5.1 - 7.6	23.0	20.0	1.5	6.5	2.0	2.0
3661023	7.6 - 10.2	26.2	20.0	1.5	6.5	2.0	2.0
3661024	10.2 - 12.7	30.5	20.0	1.5	6.5	2.0	2.0
3661025	14.0 - 16.5	31.8	20.0	1.5	6.5	2.0	2.0
3661026	17.8 - 20.3	38.6	20.0	1.5	6.5	2.2	2.2

Curly-Lock Cable Clips - Side Entry
侧入式扭线环



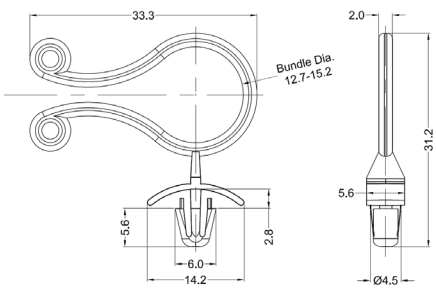

Specifications: RoHS ✓
规格

Material: Nylon 66
Colour: Natural

材料：尼龙 66
颜色：本色

- Releasable and reusable for easy wire bundling
- Designed for mounting in hard to reach places
- 可松开和重复使用，便于电线捆扎
- 用于特殊位置的安装

Part Number and Flammability 零件号和阻燃等级		Hole Size 安装孔径	Panel Thickness 面板厚度
UL94V-2	UL94V-0		
3661032	3661132	4.75	1.6

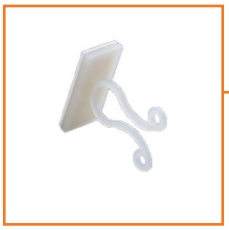

Curly-Lock Cable Clips - Self-Adhesive
背胶扭线环

- Self adhesive base for secure surface mount
- Locking ends "twist" into place with fingertip pressure

- 带备胶底座可以牢固地贴在表面
- 用手指将末端锁扣“扭结”到位即可

Specifications: 规格 — RoHS ✓

Material: Nylon 66
Colour: Natural
Flammability Rating: UL94V2

材料：尼龙 66
颜色：本色
阻燃等级：UL94V2

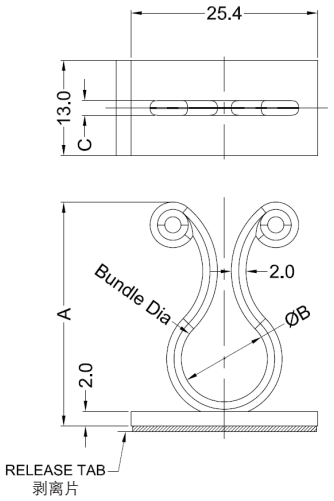

Part Number 零件号	Bundle Diameter 夹持线径	A	B	C	Adhesive Tape Dimensions 背胶尺寸
3662030	7.6 - 10.2	27.2	9.2	1.5	12.5 x 25.0 x 1.0
3662031	10.2 - 12.7	31.2	11.7	1.8	12.5 x 25.0 x 1.0
3662033	17.8 - 20.3	40.1	19.3	2.0	12.5 x 25.0 x 1.0



Stand-Off Twist Lock Cable Clips
隔离扭线环

- Designed for isolating cables from other board components
- Locking ends "twist" into place with fingertip pressure

- 用于将电缆和其他面板组件隔离
- 用手指将末端锁扣“扭结”到位即可

Specifications: 规格 — RoHS ✓

Material: Nylon 66
Colour: Natural

材料：尼龙 66
颜色：本色

Part Number and Flammability 零件号和阻燃等级		Hole Size 安装孔径	Panel Thickness 面板厚度	A	B	C	D	Fig. 图
UL94V-2	UL94V-0							
3661040	3661140	4.75	0.8 - 2.0	4.0	19.1	16.0	5.1 - 7.6	1
3661041	3661141	4.75	0.8 - 2.0	4.8	19.1	16.0	5.1 - 7.6	1
3661042	3661142	4.75	0.8 - 2.0	12.7	19.1	16.0	5.1 - 7.6	1
3661043	3661143	4.75	0.8 - 2.0	19.1	19.1	16.0	5.1 - 7.6	1
3661044	3661144	4.75	0.8 - 2.0	25.4	19.1	16.0	5.1 - 7.6	1
3661045	3661145	4.75	0.8 - 2.0	31.8	19.1	16.0	5.1 - 7.6	1
3662041	3662141	4.75	0.8 - 2.0	4.8	23.1	17.5	7.6 - 10.2	1
3662042	3662142	4.75	0.8 - 2.0	12.7	23.1	17.5	7.6 - 10.2	1
3662043	3662143	4.75	0.8 - 2.0	19.1	23.1	17.5	7.6 - 10.2	1
3662044	3662144	4.75	0.8 - 2.0	25.4	23.1	17.5	7.6 - 10.2	1
3662045	3662145	4.75	0.8 - 2.0	31.8	23.1	17.5	7.6 - 10.2	1
3663041	3663141	4.75	0.8 - 2.0	4.8	27.7	19.0	10.2 - 12.7	1
3663042	3663142	4.75	0.8 - 2.0	12.7	27.7	19.0	10.2 - 12.7	1
3663043	3663143	4.75	0.8 - 2.0	19.1	27.7	19.0	10.2 - 12.7	1
3663044	3663144	4.75	0.8 - 2.0	25.4	27.7	19.0	10.2 - 12.7	1
3663045	3663145	4.75	0.8 - 2.0	31.8	27.7	19.0	10.2 - 12.7	1
3664040	3664140	4.75	0.8 - 2.0	4.0	32.5	21.0	12.7 - 15.2	1
3664041	3664141	4.75	0.8 - 2.0	4.8	32.5	21.0	12.7 - 15.2	1
3664042	3664142	4.75	0.8 - 2.0	12.7	32.5	21.0	12.7 - 15.2	1
3664043	3664143	4.75	0.8 - 2.0	19.1	32.5	21.0	12.7 - 15.2	1
3664044	3664144	4.75	0.8 - 2.0	25.4	32.5	21.0	12.7 - 15.2	1
3664045	3664145	4.75	0.8 - 2.0	31.8	32.5	21.0	12.7 - 15.2	1
3665041	3665141	4.75	0.8 - 2.0	4.8	36.8	23.5	17.8 - 20.3	1
3665042	3665142	4.75	0.8 - 2.0	12.7	36.8	23.5	17.8 - 20.3	1
3665043	3665143	4.75	0.8 - 2.0	19.1	36.8	23.5	17.8 - 20.3	1
3665044	3665144	4.75	0.8 - 2.0	25.4	36.8	23.5	17.8 - 20.3	1
3665045	3665145	4.75	0.8 - 2.0	31.8	36.8	23.5	17.8 - 20.3	1

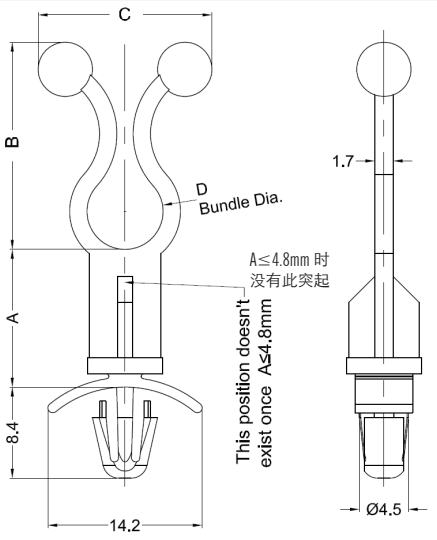

Fig.1 / 图 1

Continued...
转下页 ...

Tel: +86 512 6733 5586 or 6733 5583
Email: china@optimascomponents.com

Stand-Off Twist Lock Cable Clips
隔离扭线环



Specifications: 规格 — RoHS ✓

Material: Nylon 66
Colour: Natural

材料：尼龙 66
颜色：本色

- Designed for isolating cables from other board components
- Locking ends "twist" into place with fingertip pressure

- 用于将电缆和其他面板组件隔离
- 用手指将末端锁扣“扭结”到位即可

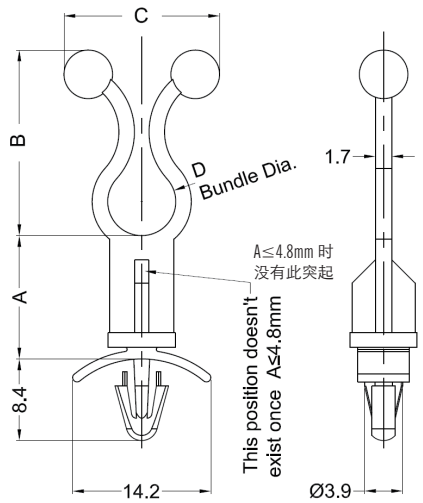

Fig.2 / 图 2

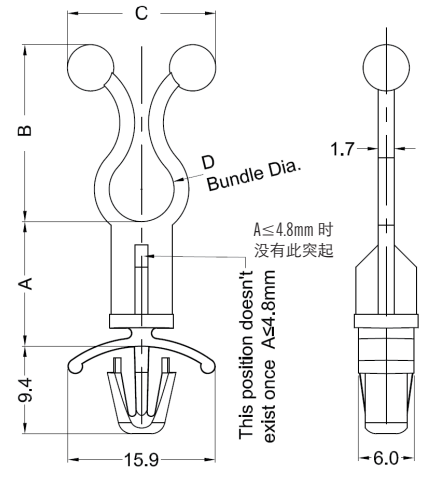

Fig.3 / 图 3

Part Number and Flammability 零件号和阻燃等级		Hole Size 安装孔径	Panel Thickness 面板厚度	A	B	C	D	Fig. 图
UL94V-2	UL94V-0							
3661050	3661150	4.0	0.8 - 2.0	4.0	19.1	16.0	5.1 - 7.6	2
3661051	3661151	4.0	0.8 - 2.0	4.8	19.1	16.0	5.1 - 7.6	2
3661052	3661152	4.0	0.8 - 2.0	12.7	19.1	16.0	5.1 - 7.6	2
3661053	3661153	4.0	0.8 - 2.0	19.1	19.1	16.0	5.1 - 7.6	2
3661054	3661154	4.0	0.8 - 2.0	25.4	19.1	16.0	5.1 - 7.6	2
3661055	3661155	4.0	0.8 - 2.0	31.8	19.1	16.0	5.1 - 7.6	2
3662051	3662151	4.0	0.8 - 2.0	4.8	23.1	17.5	7.6 - 10.2	2
3662052	3662152	4.0	0.8 - 2.0	12.7	23.1	17.5	7.6 - 10.2	2
3662053	3662153	4.0	0.8 - 2.0	19.1	23.1	17.5	7.6 - 10.2	2
3662054	3662154	4.0	0.8 - 2.0	25.4	23.1	17.5	7.6 - 10.2	2
3662055	3662155	4.0	0.8 - 2.0	31.8	23.1	17.5	7.6 - 10.2	2
3663051	3663151	4.0	0.8 - 2.0	4.8	27.7	19.0	10.2 - 12.7	2
3663052	3663152	4.0	0.8 - 2.0	12.7	27.7	19.0	10.2 - 12.7	2
3663053	3663153	4.0	0.8 - 2.0	19.1	27.7	19.0	10.2 - 12.7	2
3663054	3663154	4.0	0.8 - 2.0	25.4	27.7	19.0	10.2 - 12.7	2
3663055	3663155	4.0	0.8 - 2.0	31.8	27.7	19.0	10.2 - 12.7	2
3664050	3664150	4.0	0.8 - 2.0	4.0	32.5	21.0	12.7 - 15.2	2
3664051	3664151	4.0	0.8 - 2.0	4.8	32.5	21.0	12.7 - 15.2	2
3664052	3664152	4.0	0.8 - 2.0	12.7	32.5	21.0	12.7 - 15.2	2
3664053	3664153	4.0	0.8 - 2.0	19.1	32.5	21.0	12.7 - 15.2	2
3664054	3664154	4.0	0.8 - 2.0	25.4	32.5	21.0	12.7 - 15.2	2
3664055	3664155	4.0	0.8 - 2.0	31.8	32.5	21.0	12.7 - 15.2	2
3661062	3661162	6.0	0.8 - 2.0	4.0	19.1	16.0	5.1 - 7.6	3
3661063	3661163	6.0	0.8 - 2.0	4.8	19.1	16.0	5.1 - 7.6	3
3661064	3661164	6.0	0.8 - 2.0	12.7	19.1	16.0	5.1 - 7.6	3
3661065	3661165	6.0	0.8 - 2.0	19.1	19.1	16.0	5.1 - 7.6	3
3661066	3661166	6.0	0.8 - 2.0	25.4	19.1	16.0	5.1 - 7.6	3
3661067	3661167	6.0	0.8 - 2.0	31.8	19.1	16.0	5.1 - 7.6	3
3662063	3662163	6.0	0.8 - 2.0	4.8	23.1	17.5	7.6 - 10.2	3
3662064	3662164	6.0	0.8 - 2.0	12.7	23.1	17.5	7.6 - 10.2	3
3662065	3662165	6.0	0.8 - 2.0	19.1	23.1	17.5	7.6 - 10.2	3
3662066	3662166	6.0	0.8 - 2.0	25.4	23.1	17.5	7.6 - 10.2	3
3662067	3662167	6.0	0.8 - 2.0	31.8	23.1	17.5	7.6 - 10.2	3
3663063	3663163	6.0	0.8 - 2.0	4.8	27.7	19.0	10.2 - 12.7	3
3663064	3663164	6.0	0.8 - 2.0	12.7	27.7	19.0	10.2 - 12.7	3
3663065	3663165	6.0	0.8 - 2.0	19.1	27.7	19.0	10.2 - 12.7	3
3663066	3663166	6.0	0.8 - 2.0	25.4	27.7	19.0	10.2 - 12.7	3
3663067	3663167	6.0	0.8 - 2.0	31.8	27.7	19.0	10.2 - 12.7	3
3664062	3664162	6.0	0.8 - 2.0	4.0	32.5	21.0	12.7 - 15.2	3
3664063	3664163	6.0	0.8 - 2.0	4.8	32.5	21.0	12.7 - 15.2	3
3664064	3664164	6.0	0.8 - 2.0	12.7	32.5	21.0	12.7 - 15.2	3
3664065	3664165	6.0	0.8 - 2.0	19.1	32.5	21.0	12.7 - 15.2	3
3664066	3664166	6.0	0.8 - 2.0	25.4	32.5	21.0	12.7 - 15.2	3
3664067	3664167	6.0	0.8 - 2.0	31.8	32.5	21.0	12.7 - 15.2	3

Continued...
转下页 ...



Stand-Off Twist Lock Cable Clips
隔离扭线环

- Designed for isolating cables from other board components
- Locking ends “twist” into place with fingertip pressure

- 用于将电缆和其他面板组件隔离
- 用手指将末端锁扣 “扭结” 到位即可

Specifications: 规格 — RoHS ✓

Material: Nylon 66
Colour: Natural

材料：尼龙 66
颜色：本色

Part Number and Flammability 零件号和阻燃等级		Hole Size 安装孔径	Panel Thickness 面板厚度	A	B	C	D	E	Fig. 图
UL94V-2	UL94V-0								
3661080	3661080-BK*	6.0	0.8 - 2.0	4.0	27.7	19.0	10.2 - 12.7	-	4
3661081	3661081-BK*	6.0	0.8 - 2.0	4.8	27.7	19.0	10.2 - 12.7	-	4
3661082	3661082-BK*	6.0	0.8 - 2.0	12.7	27.7	19.0	10.2 - 12.7	-	4
3661083	3661083-BK*	6.0	0.8 - 2.0	19.1	27.7	19.0	10.2 - 12.7	-	4
3661084	3661084-BK*	6.0	0.8 - 2.0	25.4	27.7	19.0	10.2 - 12.7	-	4
3661085	3661085-BK*	6.0	0.8 - 2.0	31.8	27.7	19.0	10.2 - 12.7	-	4
3661070	3661070-BK*	6.5	0.8 - 1.6	4.0	19.1	16.0	5.1 - 7.6	1.5	5
3661071	3661071-BK*	6.5	0.8 - 1.6	4.8	19.1	16.0	5.1 - 7.6	1.5	5
3661072	3661072-BK*	6.5	0.8 - 1.6	6.0	19.1	16.0	5.1 - 7.6	1.5	5
3661073	3661073-BK*	6.5	0.8 - 1.6	8.0	19.1	16.0	5.1 - 7.6	1.5	5
3661074	3661074-BK*	6.5	0.8 - 1.6	10.0	19.1	16.0	5.1 - 7.6	1.5	5
3661075	3661075-BK*	6.5	0.8 - 1.6	12.0	19.1	16.0	5.1 - 7.6	1.5	5
3661076	3661076-BK*	6.5	0.8 - 1.6	12.7	19.1	16.0	5.1 - 7.6	1.5	5
3661077	3661077-BK*	6.5	0.8 - 1.6	19.1	19.1	16.0	5.1 - 7.6	1.5	5
3661078	3661078-BK*	6.5	0.8 - 1.6	25.4	19.1	16.0	5.1 - 7.6	1.5	5
3661079	3661079-BK*	6.5	0.8 - 1.6	31.8	19.1	16.0	5.1 - 7.6	1.5	5
3662070	3662070-BK*	6.5	0.8 - 1.6	4.0	36.8	23.5	17.8 - 20.3	1.8	5
3662071	3662071-BK*	6.5	0.8 - 1.6	4.8	36.8	23.5	17.8 - 20.3	1.8	5
3662072	3662072-BK*	6.5	0.8 - 1.6	6.0	36.8	23.5	17.8 - 20.3	1.8	5
3662073	3662073-BK*	6.5	0.8 - 1.6	8.0	36.8	23.5	17.8 - 20.3	1.8	5
3662074	3662074-BK*	6.5	0.8 - 1.6	10.0	36.8	23.5	17.8 - 20.3	1.8	5
3662075	3662075-BK*	6.5	0.8 - 1.6	12.0	36.8	23.5	17.8 - 20.3	1.8	5
3662076	3662076-BK*	6.5	0.8 - 1.6	12.7	36.8	23.5	17.8 - 20.3	1.8	5
3662077	3662077-BK*	6.5	0.8 - 1.6	19.1	36.8	23.5	17.8 - 20.3	1.8	5
3662078	3662078-BK*	6.5	0.8 - 1.6	25.4	36.8	23.5	17.8 - 20.3	1.8	5
3662079	3662079-BK*	6.5	0.8 - 1.6	31.8	36.8	23.5	17.8 - 20.3	1.8	5
3661056	3661156	7.9	6.4 min. / 最小	4.0	32.5	21.0	12.7 - 15.2	-	6
3661057	3661157	7.9	6.4 min. / 最小	4.8	32.5	21.0	12.7 - 15.2	-	6
3661058	3661158	7.9	6.4 min. / 最小	12.7	32.5	21.0	12.7 - 15.2	-	6
3661059	3661159	7.9	6.4 min. / 最小	19.1	32.5	21.0	12.7 - 15.2	-	6
3661060	3661160	7.9	6.4 min. / 最小	25.4	32.5	21.0	12.7 - 15.2	-	6
3661061	3661161	7.9	6.4 min. / 最小	31.8	32.5	21.0	12.7 - 15.2	-	6
3663057	3663157	7.9	6.4 min. / 最小	4.8	36.8	23.5	17.8 - 20.3	-	6
3663058	3663158	7.9	6.4 min. / 最小	12.7	36.8	23.5	17.8 - 20.3	-	6
3663059	3663159	7.9	6.4 min. / 最小	19.1	36.8	23.5	17.8 - 20.3	-	6
3663060	3663160	7.9	6.4 min. / 最小	25.4	36.8	23.5	17.8 - 20.3	-	6
3663061	3663161	7.9	6.4 min. / 最小	31.8	36.8	23.5	17.8 - 20.3	-	6
3664056	3664156	7.9	6.4 min. / 最小	4.0	32.5	21.0	12.7 - 15.2	-	6
3664057	3664157	7.9	6.4 min. / 最小	4.8	32.5	21.0	12.7 - 15.2	-	6
3664058	3664158	7.9	6.4 min. / 最小	12.7	32.5	21.0	12.7 - 15.2	-	6
3664059	3664159	7.9	6.4 min. / 最小	19.1	32.5	21.0	12.7 - 15.2	-	6
3664060	3664160	7.9	6.4 min. / 最小	25.4	32.5	21.0	12.7 - 15.2	-	6
3664061	3664161	7.9	6.4 min. / 最小	31.8	32.5	21.0	12.7 - 15.2	-	6

* Non-stock item, could be available subject to minimum order quantity
* 非库存产品，达到最小订货量可以供货

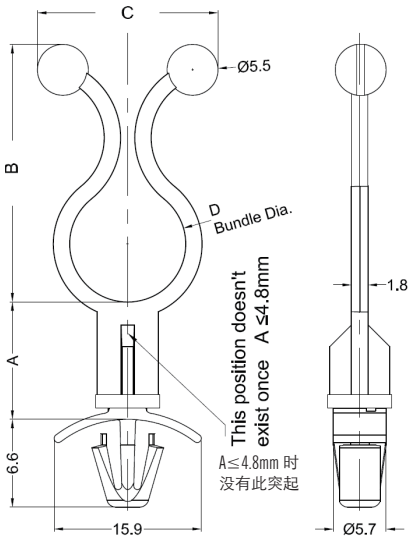

Fig.4 / 图 4

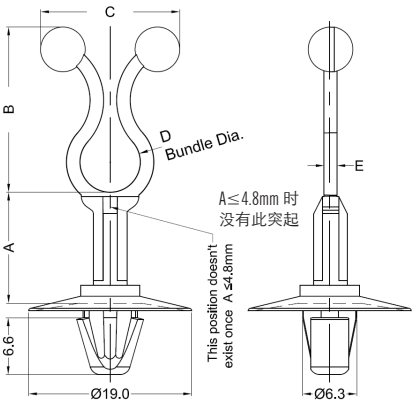

Fig.5 / 图 5

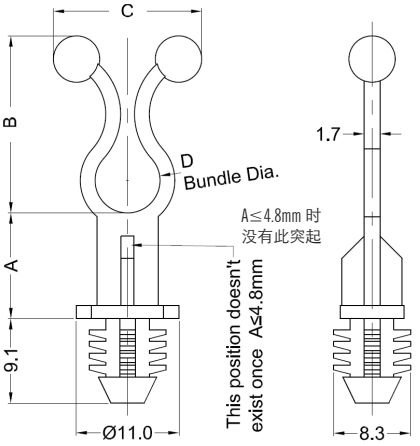

Fig.6 / 图 6

Tel: +86 512 6733 5586 or 6733 5583
Email: china@optimascomponents.com

Wire Harness Clamps
固定线夹



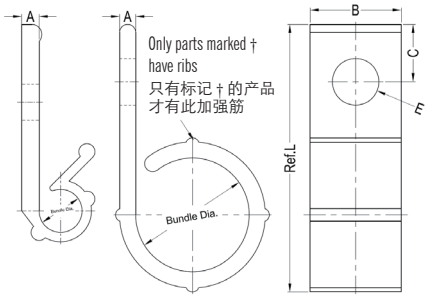

Fig.1 / 图 1 Fig.2 / 图 2

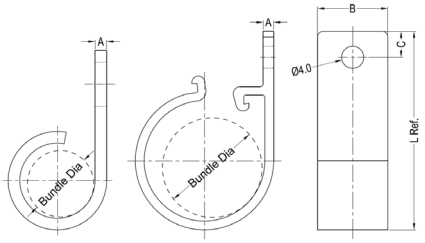

Fig.3 / 图 3 Fig.4 / 图 4

Specifications: 规格 — **RoHS ✓**

Material: Nylon 66

材料：尼龙 66

- Cables/wires can be installed or removed without removing the clamp
- Mounts securely with a screw or rivet
- 不用拆卸线夹即可安装和取出电线
- 采用螺钉或者铆钉即可固定

Part Number, Flammability and Colour 零件号，阻燃等级和颜色				Bundle Diameter 夹持线径	A	B	C	E	L	Fig. 图
UL94V-2		UL94V-0								
Natural 本色	Black 黑色	Natural 本色	Black 黑色							
3631050	3631050-BK	3631150	3631150-BK	3.2	1.3	8.5	5.8	4.0	19.5	1
3631051†	3631051-BK†	3631151†	3631151-BK†	6.4	1.5	10.3	6.4	5.2	21.8	2
3631055†	3631055-BK†	3631155†	3631155-BK†	9.5	1.3	10.2	4.8	5.2	21.1	2
3631052	3631052-BK	3631152	3631152-BK	12.5	1.8	10.2	6.4	5.2	29.4	2
3631056	3631056-BK	3631156	3631156-BK	15.9	2.0	12.7	4.8	5.2	28.6	2
3631054	3631054-BK	3631154	3631154-BK	19.1	2.1	12.7	4.8	5.2	32.5	2
3631053	3631053-BK	3631153	3631153-BK	25.4	2.2	12.7	4.8	5.2	38.9	2
3631057	3631057-BK	3631157	3631157-BK	38.1	2.5	12.7	4.8	5.2	53.9	2
3631060	3631060-BK*	3631160	3631160-BK*	6.4	1.0	10.0	6.0	1.0	21.0	3
3631061	3631061-BK*	3631161	3631161-BK*	12.7	1.6	10.0	4.7	1.4	30.0	4
3631062	3631062-BK*	3631162	3631162-BK*	18.0	1.8	12.7	4.7	1.6	35.0	4

Plug-In Adjustable Cable Clips
扣锁式可调线夹



Specifications: 规格 — **RoHS ✓**

Material: Nylon 66 材料：尼龙 66

Colour: Natural 颜色：本色

- Ratcheting system allows adjustment stages, letting you tighten to the diameter of the wiring bundle
- One-touch ratchet lock release makes maintenance simple
- 棘齿式结构可以进行调整，可按照线束直径对其夹紧
- 一键式棘齿锁定释放结构便于维护

Part Number and Flammability 零件号和阻燃等级		Hole Size 安装孔径	Panel Thickness 面板厚度	Bundle Diameter 夹持线径	Fig. 图
UL94V-2	UL94V-0				
0922001	0922101	6.35	0.8 - 1.5	11.9 - 14.0	1
0922002	0922102	6.35	0.8 - 1.5	14.7 - 19.1	2

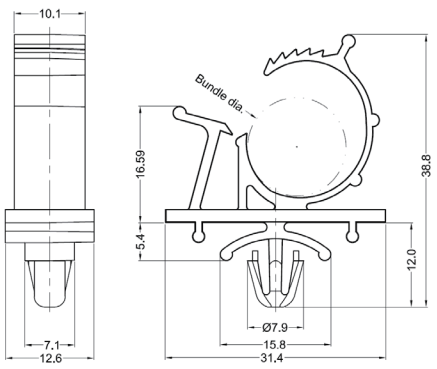

Fig.1 / 图 1

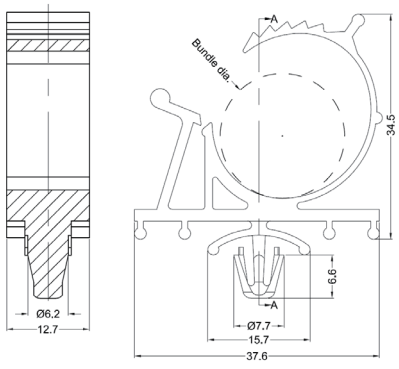

Fig.2 / 图 2



Stand-Off Twist Locking Clips
拧锁式隔离线夹

- Twist locking design makes it easy to open & close
- Designed for isolating cables from other board components

- 拧锁式的设计使线夹可以轻松打开和关闭
- 用于将电缆和其他面板组件隔离

Specifications: 规格 — RoHS ✓

Material: Nylon 66
Colour: Natural

材料：尼龙 66
颜色：本色

Part Number and Flammability 零件号和阻燃等级		Hole Size 安装孔径	Panel Thickness 面板厚度	Max. Bundle Diameter 最大夹持线径	A	B	Fig. 图
UL94V-2	UL94V-0						
3671001	3671101	4.75	1.6	4.8	4.0	13.5	1
3671002	3671102	4.75	1.6	4.8	4.8	13.5	1
3671003	3671103	4.75	1.6	4.8	6.4	13.5	1
3671004	3671104	4.75	1.6	4.8	9.5	13.5	1
3671005	3671105	4.75	1.6	4.8	12.7	13.5	1
3671006	3671106	4.75	1.6	4.8	15.9	13.5	1
3671007	3671107	4.75	1.6	4.8	25.4	13.5	1
3672002	3672102	4.75	1.6	11.1	4.8	20.1	1
3672003	3672103	4.75	1.6	11.1	6.4	20.1	1
3672004	3672104	4.75	1.6	11.1	9.5	20.1	1
3672005	3672105	4.75	1.6	11.1	12.7	20.1	1
3672006	3672106	4.75	1.6	11.1	15.9	20.1	1
3672007	3672107	4.75	1.6	11.1	25.4	20.1	1
3671010	3671110	4.75	0.8 - 2.0	12.0	4.8	19.6	2
3671011	3671111	4.75	0.8 - 2.0	12.0	6.4	19.6	2
3671012	3671112	4.75	0.8 - 2.0	12.0	9.5	19.6	2
3671013	3671113	4.75	0.8 - 2.0	12.0	12.7	19.6	2
3672010	3672110	4.75	0.8 - 2.0	18.4	4.8	26.1	2
3672011	3672111	4.75	0.8 - 2.0	18.4	6.4	26.1	2
3672012	3672112	4.75	0.8 - 2.0	18.4	9.5	26.1	2
3672013	3672113	4.75	0.8 - 2.0	18.4	12.7	26.1	2
3671014	3671114	4.75	2.0 - 4.0	12.0	4.8	19.6	2
3671015	3671115	4.75	2.0 - 4.0	12.0	6.4	19.6	2
3671016	3671116	4.75	2.0 - 4.0	12.0	9.5	19.6	2
3671017	3671117	4.75	2.0 - 4.0	12.0	12.7	19.6	2
3672014	3672114	4.75	2.0 - 4.0	18.4	4.8	26.1	2
3672015	3672115	4.75	2.0 - 4.0	18.4	6.4	26.1	2
3672016	3672116	4.75	2.0 - 4.0	18.4	9.5	26.1	2
3672017	3672117	4.75	2.0 - 4.0	18.4	12.7	26.1	2

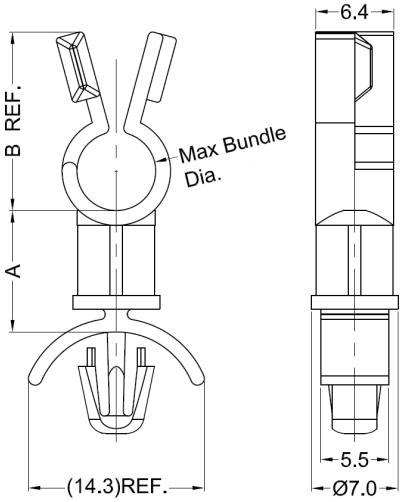

Fig.1 / 图 1

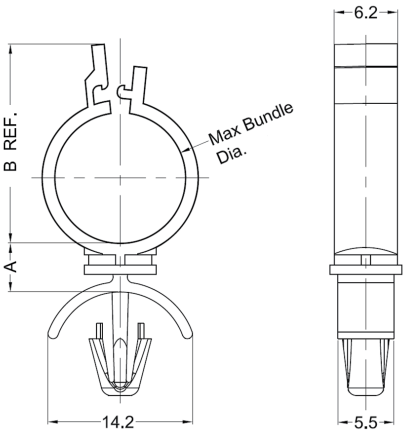

Fig.2 / 图 2

Tel: +86 512 6733 5586 or 6733 5583
Email: china@optimascomponents.com



Specifications: 规格 — RoHS ✓

Material: Nylon 66
Colour: Natural

材料：尼龙 66
颜色：本色

- Releasable and reusable for easy wire bundling
- Designed for isolating cables from other board components

- 可松开和重复使用，便于电线捆扎
- 用于将电缆和其他面板组件隔离

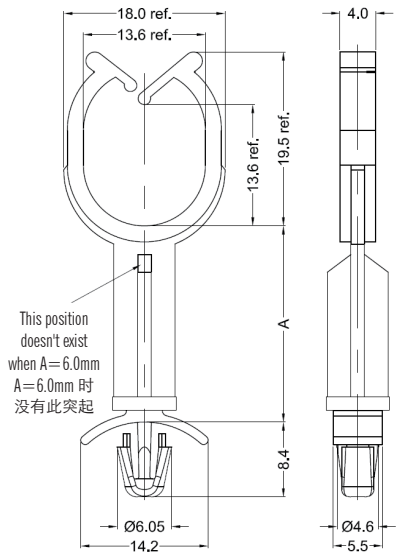

Fig.1 / 图 1

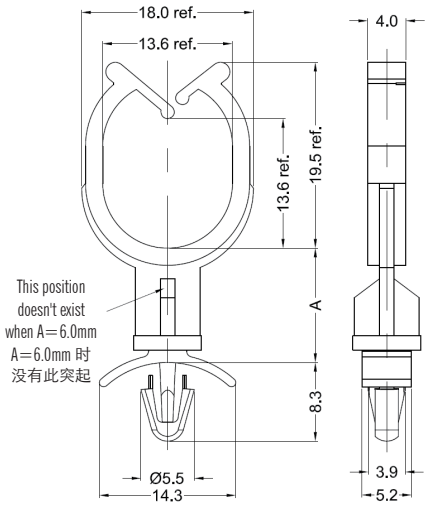

Fig.2 / 图 2

Part Number and Flammability 零件号和阻燃等级		Hole Size 安装孔径	Panel Thickness 面板厚度	A	Fig. 图
UL94V-2	UL94V-0				
3671020	3671120	4.75	1.57	6.0	1
3671021	3671121	4.75	1.57	8.0	1
3671022	3671122	4.75	1.57	9.5	1
3671023	3671123	4.75	1.57	10.0	1
3671024	3671124	4.75	1.57	12.0	1
3671025	3671125	4.75	1.57	12.7	1
3671026	3671126	4.75	1.57	14.0	1
3671027	3671127	4.75	1.57	16.0	1
3671028	3671128	4.75	1.57	18.0	1
3671029	3671129	4.75	1.57	19.1	1
3671030	3671130	4.75	1.57	20.0	1
3671031	3671131	4.75	1.57	22.0	1
3671032	3671132	4.75	1.57	24.0	1
3671033	3671133	4.75	1.57	25.4	1
3671034	3671134	4.75	1.57	26.0	1
3671035	3671135	4.75	1.57	28.0	1
3671036	3671136	4.75	1.57	31.8	1
3672020	3672120	4.0	1.6	6.0	2
3672021	3672121	4.0	1.6	8.0	2
3672023	3672123	4.0	1.6	10.0	2
3672024	3672124	4.0	1.6	12.0	2
3672026	3672126	4.0	1.6	14.0	2
3672027	3672127	4.0	1.6	16.0	2
3672028	3672128	4.0	1.6	18.0	2
3672030	3672130	4.0	1.6	20.0	2
3672031	3672131	4.0	1.6	22.0	2
3672032	3672132	4.0	1.6	24.0	2
3672034	3672134	4.0	1.6	26.0	2
3672035	3672135	4.0	1.6	28.0	2



Stand-Off Harness Clips - Self-Adhesive
背胶隔离线夹

- Releasable and reusable for easy wire bundling
- Designed for isolating cables from other board components
- Self adhesive base for secure surface mount

- 可松开和重复使用，便于电线捆扎
- 用于将电缆和其他面板组件隔离
- 带备胶底座可以牢固地贴在表面

Specifications: 规格 — **RoHS ✓**

Material: Nylon 66
Colour: Natural
Flammability Rating: UL94V2

材料：尼龙 66
颜色：本色
阻燃等级：UL94V2

Part Number 零件号	A	Adhesive Tape Dimensions 背胶尺寸
3671040	6.4	17.0 x 17.0 x 1.0
3671041	12.7	17.0 x 17.0 x 1.0
3671042	19.1	17.0 x 17.0 x 1.0
3671043	25.4	17.0 x 17.0 x 1.0

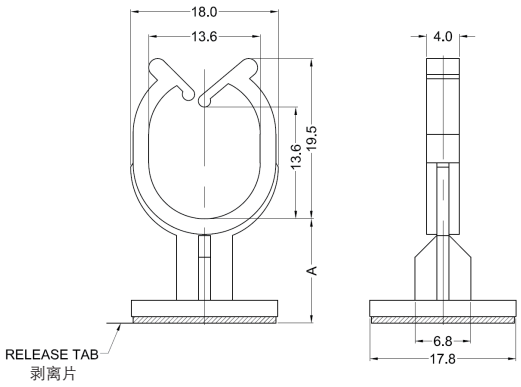



Plug-In Holding Clips
推入式固定线夹

- Manages & holds wires and cables
- Low profile and ideal for where the space is limited

- 整理和固定电线及电缆
- 高度低，适用于安装空间有限的场合

Specifications: 规格 — **RoHS ✓**

Material: Nylon 66
Colour: Natural

材料：尼龙 66
颜色：本色

Part Number and Flammability 零件号和阻燃等级		Hole Size 安装孔径	Panel Thickness 面板厚度	Fig. 图
UL94V-2	UL94V-0			
3671046	3672146*	3.18	1.57	1
3672047	3672147	3.18	1.6	2

* Non-stock item, could be available subject to minimum order quantity
* 非库存产品，达到最小订货量可以供货

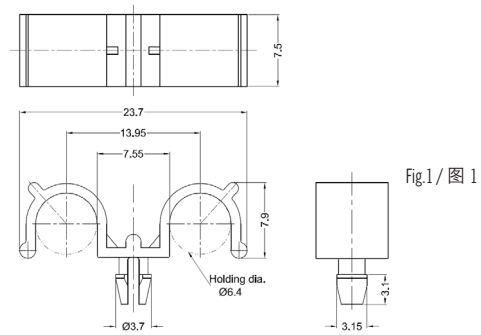

Fig.1 / 图 1

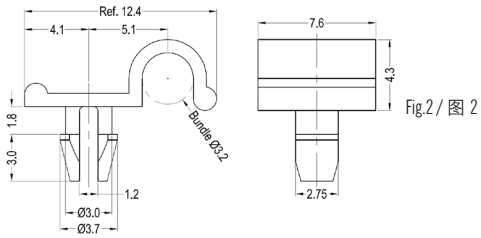

Fig.2 / 图 2



Webbed Centering Clips - Push-In
推入式中心线夹

- Finger grip makes the installation easily
- Cupped base makes the installtion more stable and can cover the hole completely

- 防滑握柄使安装更容易
- 杯形底座增加了安装的稳定性并可以完全覆盖安装孔

Specifications: 规格 — **RoHS ✓**

Material: Nylon 66
Colour: Natural

材料：尼龙 66
颜色：本色

Part Number and Flammability 零件号和阻燃等级		Hole Size 安装孔径	Panel Thickness 面板厚度
UL94V-2	UL94V-0		
3673048	3673148	4.4 - 4.8	0.5 - 1.5

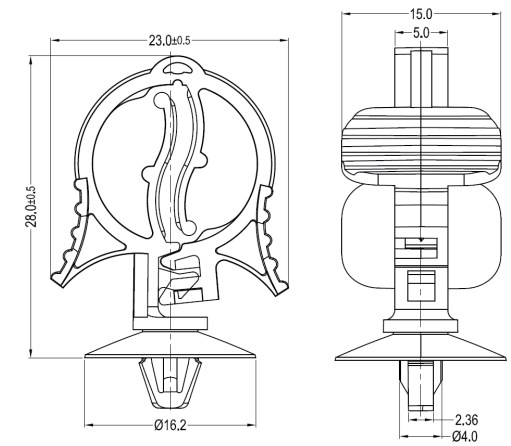

Tel: +86 512 6733 5586 or 6733 5583
Email: china@optimascomponents.com

Locking Circuit Board Supports - Type I
I 型锁定式电路板间隔柱



Specifications: 规格 — RoHS ✓

Material: Nylon 66 材料：尼龙 66
Colour: Natural 颜色：本色

- Firmly and accurately maintains a constant distance between the chassis and PC board
- 牢固而准确的保持底板与印刷电路板之间的距离

Part Number and Flammability 零件号和阻燃等级		Dimensions 尺寸					Fig. 图
		A	Top Hole 顶端安装孔		Bottom Hole 底部安装孔		
UL94V-2	UL94V-0		Hole Size 孔径	Panel Thickness 面板厚度	Hole Size 孔径	Panel Thickness 面板厚度	
0511001	0511101	3.2	3.18	1.57	3.18	1.57	1
0511002	0511102	4.8	3.18	1.57	3.18	1.57	1
0511003	0511103	6.4	3.18	1.57	3.18	1.57	1
0511004	0511104	7.9	3.18	1.57	3.18	1.57	1
0511005	0511105	9.5	3.18	1.57	3.18	1.57	1
0511006	0511106	11.1	3.18	1.57	3.18	1.57	1
0511007	0511107	12.7	3.18	1.57	3.18	1.57	1
0511008	0511108	14.3	3.18	1.57	3.18	1.57	1
0511009	0511109	15.9	3.18	1.57	3.18	1.57	1
0511010	0511110	19.1	3.18	1.57	3.18	1.57	1
0511011	0511111	22.2	3.18	1.57	3.18	1.57	1
0512001	0512101	3.2	3.18	1.57	2.54	1.63	2
0512002	0512102	4.8	3.18	1.57	2.54	1.63	2
0512003	0512103	6.4	3.18	1.57	2.54	1.63	2
0512004	0512104	7.9	3.18	1.57	2.54	1.63	2
0512005	0512105	9.5	3.18	1.57	2.54	1.63	2
0512006	0512106	11.1	3.18	1.57	2.54	1.63	2
0512007	0512107	12.7	3.18	1.57	2.54	1.63	2
0512008	0512108	15.9	3.18	1.57	2.54	1.63	2

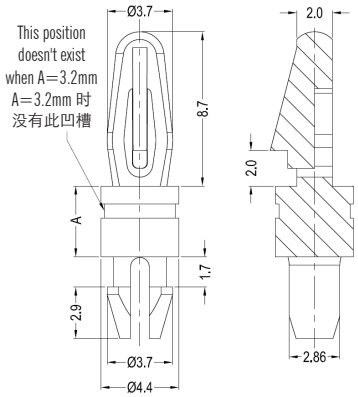

Fig.1 / 图 1

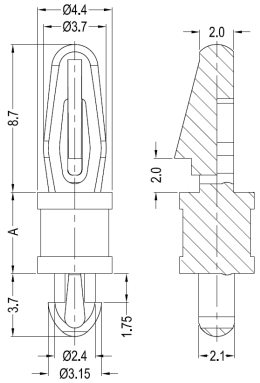

Fig.2 / 图 2



Locking Circuit Board Supports - Type II
II 型锁定式电路板间隔柱

- Firmly and accurately maintains a constant distance between the chassis and PC board
- 牢固而准确的保持底板与印刷电路板之间的距离

Specifications: 规格 — **RoHS ✓**

Material: Nylon 66
Colour: Natural

材料：尼龙 66
颜色：本色

Part Number and Flammability 零件号和阻燃等级		Dimensions 尺寸					Fig. 图
		A	Top Hole 顶端安装孔		Bottom Hole 底部安装孔		
UL94V-2	UL94V-0		Hole Size 孔径	Panel Thickness 面板厚度	Hole Size 孔径	Panel Thickness 面板厚度	
0511020	0511120	4.8	4.75	0.79 - 1.98	4.0	1.57	1
0511021	0511121	6.4	4.75	0.79 - 1.98	4.0	1.57	1
0511022	0511122	7.9	4.75	0.79 - 1.98	4.0	1.57	1
0511023	0511123	9.5	4.75	0.79 - 1.98	4.0	1.57	1
0511024	0511124	11.1	4.75	0.79 - 1.98	4.0	1.57	1
0511025	0511125	12.7	4.75	0.79 - 1.98	4.0	1.57	1
0511026	0511126	15.9	4.75	0.79 - 1.98	4.0	1.57	1
0511027	0511127	19.1	4.75	0.79 - 1.98	4.0	1.57	1
0511028	0511128	22.2	4.75	0.79 - 1.98	4.0	1.57	1
0511029	0511129	25.4	4.75	0.79 - 1.98	4.0	1.57	1
0511030	0511130	28.6	4.75	0.79 - 1.98	4.0	1.57	1
0511031	0511131	31.7	4.75	0.79 - 1.98	4.0	1.57	1
0511032	0511132	34.9	4.75	0.79 - 1.98	4.0	1.57	1
0512020	0512120	4.8	4.75	0.79 - 1.98	4.0	1.57	2
0512021	0512121	6.4	4.75	0.79 - 1.98	4.0	1.57	2
0512022	0512122	7.9	4.75	0.79 - 1.98	4.0	1.57	2
0512023	0512123	9.5	4.75	0.79 - 1.98	4.0	1.57	2
0512024	0512124	11.1	4.75	0.79 - 1.98	4.0	1.57	2
0512025	0512125	12.7	4.75	0.79 - 1.98	4.0	1.57	2
0512026	0512126	15.9	4.75	0.79 - 1.98	4.0	1.57	2
0512027	0512127	19.1	4.75	0.79 - 1.98	4.0	1.57	2
0512028	0512128	22.2	4.75	0.79 - 1.98	4.0	1.57	2
0512029	0512129	25.4	4.75	0.79 - 1.98	4.0	1.57	2
0512030	0512130	28.6	4.75	0.79 - 1.98	4.0	1.57	2
0512031	0512131	31.7	4.75	0.79 - 1.98	4.0	1.57	2
0512032	0512132	34.9	4.75	0.79 - 1.98	4.0	1.57	2

Continued...
转下页 ...

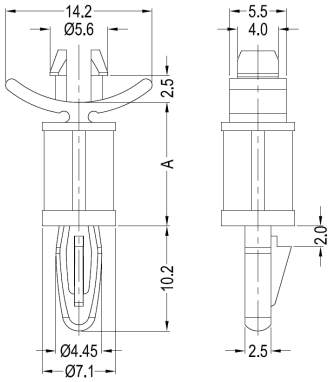

Fig.1 / 图 1

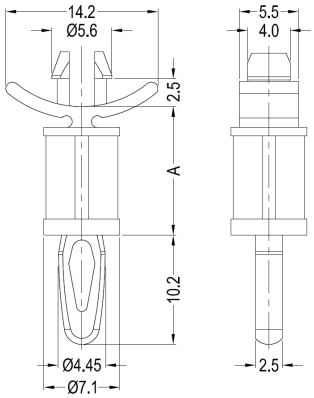

Fig.2 / 图 2

Tel: +86 512 6733 5586 or 6733 5583
Email: china@optimascomponents.com

Locking Circuit Board Supports - Type II
II 型锁定式电路板间隔柱



Specifications: 规格
RoHS ✓

Material: Nylon 66
Colour: Natural

材料：尼龙 66
颜色：本色

- Firmly and accurately maintains a constant distance between the chassis and PC board
- 牢固而准确的保持底板与印刷电路板之间的距离

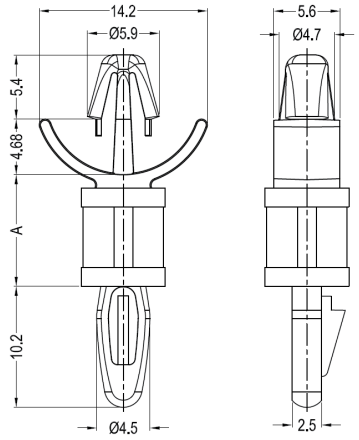

Fig.3 / 图 3

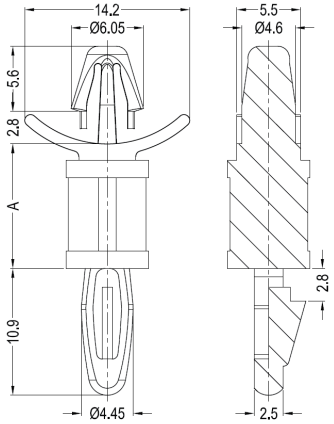

Fig.4 / 图 4

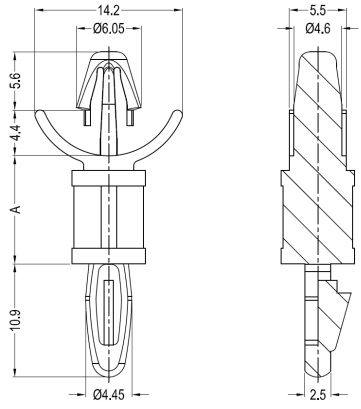

Fig.5 / 图 5

Part Number and Flammability 零件号和阻燃等级		Dimensions 尺寸					Fig. 图
		A	Top Hole 顶端安装孔		Bottom Hole 底部安装孔		
UL94V-2	UL94V-0		Hole Size 孔径	Panel Thickness 面板厚度	Hole Size 孔径	Panel Thickness 面板厚度	
0511040	0511140	4.8	4.75	1.98 - 3.56	4.0	1.57	3
0511041	0511141	6.4	4.75	1.98 - 3.56	4.0	1.57	3
0511042	0511142	7.9	4.75	1.98 - 3.56	4.0	1.57	3
0511043	0511143	9.5	4.75	1.98 - 3.56	4.0	1.57	3
0511044	0511144	11.1	4.75	1.98 - 3.56	4.0	1.57	3
0511045	0511145	12.7	4.75	1.98 - 3.56	4.0	1.57	3
0511046	0511146	15.9	4.75	1.98 - 3.56	4.0	1.57	3
0511047	0511147	19.1	4.75	1.98 - 3.56	4.0	1.57	3
0511048	0511148	22.2	4.75	1.98 - 3.56	4.0	1.57	3
0511049	0511149	25.4	4.75	1.98 - 3.56	4.0	1.57	3
0511050	0511150	28.6	4.75	1.98 - 3.56	4.0	1.57	3
0511051	0511151	31.7	4.75	1.98 - 3.56	4.0	1.57	3
0511052	0511152	34.9	4.75	1.98 - 3.56	4.0	1.57	3
0512040	0512140	4.8	4.75	0.79 - 1.98	4.0	2.36	4
0512041	0512141	6.4	4.75	0.79 - 1.98	4.0	2.36	4
0512042	0512142	7.9	4.75	0.79 - 1.98	4.0	2.36	4
0512043	0512143	9.5	4.75	0.79 - 1.98	4.0	2.36	4
0512044	0512144	11.1	4.75	0.79 - 1.98	4.0	2.36	4
0512045	0512145	12.7	4.75	0.79 - 1.98	4.0	2.36	4
0512046	0512146	15.9	4.75	0.79 - 1.98	4.0	2.36	4
0512047	0512147	19.1	4.75	0.79 - 1.98	4.0	2.36	4
0512048	0512148	22.2	4.75	0.79 - 1.98	4.0	2.36	4
0512049	0512149	25.4	4.75	0.79 - 1.98	4.0	2.36	4
0512050	0512150	28.6	4.75	0.79 - 1.98	4.0	2.36	4
0512051	0512151	31.7	4.75	0.79 - 1.98	4.0	2.36	4
0512052	0512152	34.9	4.75	0.79 - 1.98	4.0	2.36	4
0513040	0513140	4.8	4.75	1.98 - 3.56	4.0	2.36	5
0513041	0513141	6.4	4.75	1.98 - 3.56	4.0	2.36	5
0513042	0513142	7.9	4.75	1.98 - 3.56	4.0	2.36	5
0513043	0513143	9.5	4.75	1.98 - 3.56	4.0	2.36	5
0513044	0513144	11.1	4.75	1.98 - 3.56	4.0	2.36	5
0513045	0513145	12.7	4.75	1.98 - 3.56	4.0	2.36	5
0513046	0513146	15.9	4.75	1.98 - 3.56	4.0	2.36	5
0513047	0513147	19.1	4.75	1.98 - 3.56	4.0	2.36	5
0513048	0513148	22.2	4.75	1.98 - 3.56	4.0	2.36	5
0513049	0513149	25.4	4.75	1.98 - 3.56	4.0	2.36	5
0513050	0513150	28.6	4.75	1.98 - 3.56	4.0	2.36	5
0513051	0513151	31.7	4.75	1.98 - 3.56	4.0	2.36	5
0513052	0513152	34.9	4.75	1.98 - 3.56	4.0	2.36	5

Continued...
转下页 ...



Locking Circuit Board Supports - Type II
II 型锁定式电路板间隔柱

- Firmly and accurately maintains a constant distance between the chassis and PC board
- 牢固而准确的保持底板与印刷电路板之间的距离

Specifications: 规格 — RoHS ✓

Material: Nylon 66
Colour: Natural

材料：尼龙 66
颜色：本色

Part Number and Flammability 零件号和阻燃等级		Dimensions 尺寸					Fig. 图
		A	Top Hole 顶端安装孔		Bottom Hole 底部安装孔		
UL94V-2	UL94V-0		Hole Size 孔径	Panel Thickness 面板厚度	Hole Size 孔径	Panel Thickness 面板厚度	
0511060	0511160	4.8	4.75	0.79 - 1.98	4.0	1.57	6
0511061	0511161	6.0	4.75	0.79 - 1.98	4.0	1.57	6
0511062	0511162	6.4	4.75	0.79 - 1.98	4.0	1.57	6
0511063	0511163	7.9	4.75	0.79 - 1.98	4.0	1.57	6
0511064	0511164	8.0	4.75	0.79 - 1.98	4.0	1.57	6
0511065	0511165	9.5	4.75	0.79 - 1.98	4.0	1.57	6
0511066	0511166	10.0	4.75	0.79 - 1.98	4.0	1.57	6
0511067	0511167	11.1	4.75	0.79 - 1.98	4.0	1.57	6
0511068	0511168	12.0	4.75	0.79 - 1.98	4.0	1.57	6
0511069	0511169	12.7	4.75	0.79 - 1.98	4.0	1.57	6
0511070	0511170	14.0	4.75	0.79 - 1.98	4.0	1.57	6
0511071	0511171	15.9	4.75	0.79 - 1.98	4.0	1.57	6
0511072	0511172	16.0	4.75	0.79 - 1.98	4.0	1.57	6
0511073	0511173	19.1	4.75	0.79 - 1.98	4.0	1.57	6
0511074	0511174	22.2	4.75	0.79 - 1.98	4.0	1.57	6
0511075	0511175	25.4	4.75	0.79 - 1.98	4.0	1.57	6
0511076	0511176	28.6	4.75	0.79 - 1.98	4.0	1.57	6
0511077	0511177	31.7	4.75	0.79 - 1.98	4.0	1.57	6
0511078	0511178	34.9	4.75	0.79 - 1.98	4.0	1.57	6
0512060	0512160	4.8	4.75	0.79 - 1.98	4.0	1.57	7
0512061	0512161	6.0	4.75	0.79 - 1.98	4.0	1.57	7
0512062	0512162	6.4	4.75	0.79 - 1.98	4.0	1.57	7
0512063	0512163	7.9	4.75	0.79 - 1.98	4.0	1.57	7
0512064	0512164	8.0	4.75	0.79 - 1.98	4.0	1.57	7
0512065	0512165	9.5	4.75	0.79 - 1.98	4.0	1.57	7
0512066	0512166	10.0	4.75	0.79 - 1.98	4.0	1.57	7
0512067	0512167	11.1	4.75	0.79 - 1.98	4.0	1.57	7
0512068	0512168	12.0	4.75	0.79 - 1.98	4.0	1.57	7
0512069	0512169	12.7	4.75	0.79 - 1.98	4.0	1.57	7
0512070	0512170	14.0	4.75	0.79 - 1.98	4.0	1.57	7
0512071	0512171	15.9	4.75	0.79 - 1.98	4.0	1.57	7
0512072	0512172	16.0	4.75	0.79 - 1.98	4.0	1.57	7
0512073	0512173	19.1	4.75	0.79 - 1.98	4.0	1.57	7
0512074	0512174	22.2	4.75	0.79 - 1.98	4.0	1.57	7
0512075	0512175	25.4	4.75	0.79 - 1.98	4.0	1.57	7
0512076	0512176	28.6	4.75	0.79 - 1.98	4.0	1.57	7
0512077	0512177	31.7	4.75	0.79 - 1.98	4.0	1.57	7
0512078	0512178	34.9	4.75	0.79 - 1.98	4.0	1.57	7

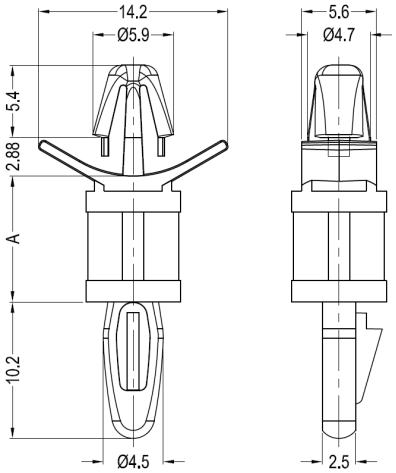

Fig.6 / 图 6

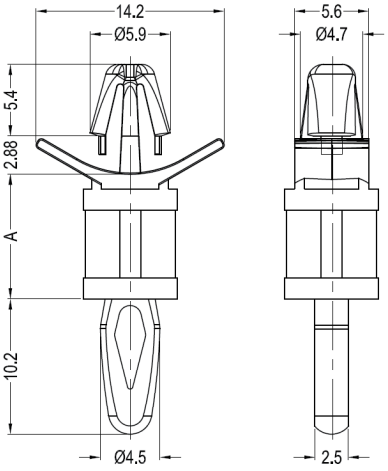

Fig.7 / 图 7

OPTIMAS

Tel: +86 512 6733 5586 or 6733 5583
Email: china@optimascomponents.com

Locking Circuit Board Supports - Type III
III 型锁定式电路板间隔柱



Specifications: RoHS ✓
规格

Material: Nylon 66
Colour: Natural

材料：尼龙 66
颜色：本色

- Firmly and accurately maintains a constant distance between the chassis and PC board
- 牢固而准确的保持底板与印刷电路板之间的距离

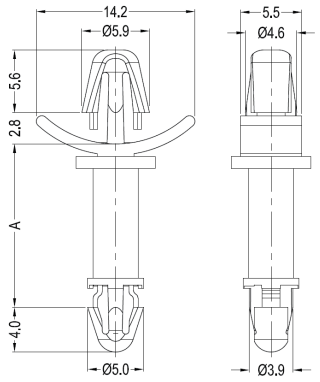

Fig.1 / 图 1

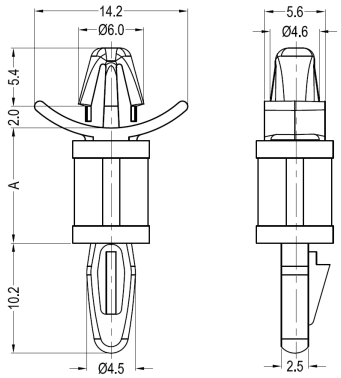

Fig.2 / 图 2

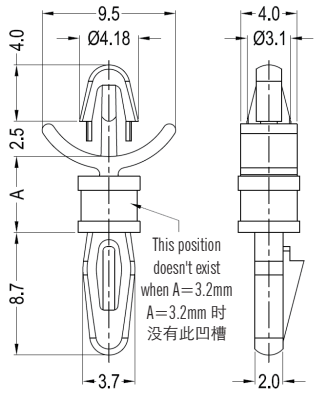

Fig.3 / 图 3

Part Number and Flammability 零件号和阻燃等级		Dimensions 尺寸					Fig. 图
		A	Top Hole 顶端安装孔		Bottom Hole 底部安装孔		
UL94V-2	UL94V-0		Hole Size 孔径	Panel Thickness 面板厚度	Hole Size 孔径	Panel Thickness 面板厚度	
0511080	0511180	4.8	4.75	0.79 - 1.98	4.0	1.6	1
0511081	0511181	6.4	4.75	0.79 - 1.98	4.0	1.6	1
0511082	0511182	7.9	4.75	0.79 - 1.98	4.0	1.6	1
0511083	0511183	9.5	4.75	0.79 - 1.98	4.0	1.6	1
0511084	0511184	11.1	4.75	0.79 - 1.98	4.0	1.6	1
0511085	0511185	12.7	4.75	0.79 - 1.98	4.0	1.6	1
0511086	0511186	15.9	4.75	0.79 - 1.98	4.0	1.6	1
0511087	0511187	19.1	4.75	0.79 - 1.98	4.0	1.6	1
0511088	0511188	22.2	4.75	0.79 - 1.98	4.0	1.6	1
0511089	0511189	25.4	4.75	0.79 - 1.98	4.0	1.6	1
0511090	0511190	28.6	4.75	0.79 - 1.98	4.0	1.6	1
0511091	0511191	31.7	4.75	0.79 - 1.98	4.0	1.6	1
0511092	0511192	34.9	4.75	0.79 - 1.98	4.0	1.6	1
0512080	0512180	4.8	4.75	0.2 - 1.4	4.0	1.57	2
0512081	0512181	6.4	4.75	0.2 - 1.4	4.0	1.57	2
0512082	0512182	7.9	4.75	0.2 - 1.4	4.0	1.57	2
0512083	0512183	9.5	4.75	0.2 - 1.4	4.0	1.57	2
0512084	0512184	11.1	4.75	0.2 - 1.4	4.0	1.57	2
0512085	0512185	12.7	4.75	0.2 - 1.4	4.0	1.57	2
0512086	0512186	15.9	4.75	0.2 - 1.4	4.0	1.57	2
0512087	0512187	19.1	4.75	0.2 - 1.4	4.0	1.57	2
0512088	0512188	22.2	4.75	0.2 - 1.4	4.0	1.57	2
0512089	0512189	25.4	4.75	0.2 - 1.4	4.0	1.57	2
0512090	0512190	28.6	4.75	0.2 - 1.4	4.0	1.57	2
0512091	0512191	31.7	4.75	0.2 - 1.4	4.0	1.57	2
0512092	0512192	34.9	4.75	0.2 - 1.4	4.0	1.57	2
0513079	0513179	3.2	3.18	0.79 - 1.98	3.18	1.57	3
0513080	0513180	4.8	3.18	0.79 - 1.98	3.18	1.57	3
0513081	0513181	6.4	3.18	0.79 - 1.98	3.18	1.57	3
0513082	0513182	7.9	3.18	0.79 - 1.98	3.18	1.57	3
0513083	0513183	9.5	3.18	0.79 - 1.98	3.18	1.57	3
0513084	0513184	11.1	3.18	0.79 - 1.98	3.18	1.57	3
0513085	0513185	12.7	3.18	0.79 - 1.98	3.18	1.57	3
0513086	0513186	14.3	3.18	0.79 - 1.98	3.18	1.57	3
0513087	0513187	15.9	3.18	0.79 - 1.98	3.18	1.57	3

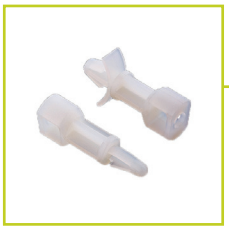

Snap Rivet Locking Circuit Board Supports
铆钉固定式电路板间隔柱

- Designed for mounting easily on chassis with snap rivet
- 用压入式铆钉即可轻松安装在底板上

Specifications: 规格 — RoHS ✓

Material: Nylon 66
Colour: Natural

材料：尼龙 66
颜色：本色

Part Number and Flammability 零件号和阻燃等级		Dimensions 尺寸					Fig. 图
		A	Top Hole 顶端安装孔		Bottom Hole 底部安装孔		
UL94V-2	UL94V-0		Hole Size 孔径	Panel Thickness 面板厚度	Hole Size 孔径	Panel Thickness 面板厚度	
0521001	0521101	9.5	4.0	1.57	4.1 - 4.2	See Rivet Table / 见铆钉数据表	1
0521002	0521102	11.1	4.0	1.57	4.1 - 4.2	See Rivet Table / 见铆钉数据表	1
0521003	0521103	12.7	4.0	1.57	4.1 - 4.2	See Rivet Table / 见铆钉数据表	1
0521004	0521104	15.9	4.0	1.57	4.1 - 4.2	See Rivet Table / 见铆钉数据表	1
0521005	0521105	19.1	4.0	1.57	4.1 - 4.2	See Rivet Table / 见铆钉数据表	1
0521006	0521106	22.2	4.0	1.57	4.1 - 4.2	See Rivet Table / 见铆钉数据表	1
0521007	0521107	25.4	4.0	1.57	4.1 - 4.2	See Rivet Table / 见铆钉数据表	1
0522002	0522102	11.1	4.75	0.79 - 1.98	4.1 - 4.2	See Rivet Table / 见铆钉数据表	2
0522003	0522103	12.7	4.75	0.79 - 1.98	4.1 - 4.2	See Rivet Table / 见铆钉数据表	2
0522004	0522104	15.9	4.75	0.79 - 1.98	4.1 - 4.2	See Rivet Table / 见铆钉数据表	2
0522005	0522105	19.1	4.75	0.79 - 1.98	4.1 - 4.2	See Rivet Table / 见铆钉数据表	2
0522006	0522106	22.2	4.75	0.79 - 1.98	4.1 - 4.2	See Rivet Table / 见铆钉数据表	2
0522007	0522107	25.4	4.75	0.79 - 1.98	4.1 - 4.2	See Rivet Table / 见铆钉数据表	2

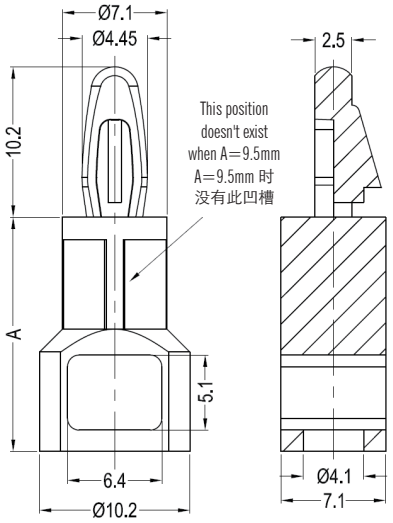

Fig.1 / 图 1

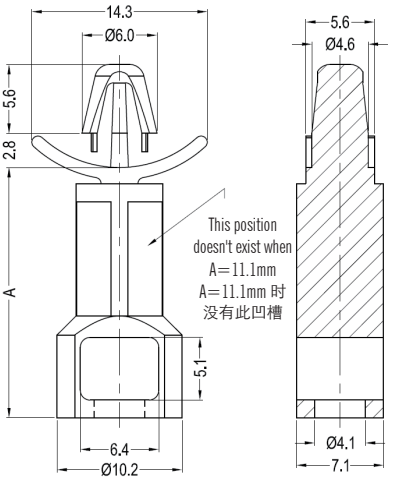

Fig.2 / 图 2

Rivet Table 铆钉数据表		
Part Number and Colour 零件号和颜色		For Chassis Thickness 用于底板厚度
White 白色	Black 黑色	
0725124	0725224	0.7 - 1.6
0725125	0725225	1.5 - 2.7
0725126	0725226	2.7 - 3.7
0725127	0725227	3.7 - 4.7
0725128	0725228	4.7 - 5.7
0725129	0725229	5.7 - 6.7
0725139	0725239	7.2 - 8.7

Tel: +86 512 6733 5586 or 6733 5583
Email: china@optimascomponents.com

Dual Locking Circuit Board Supports - Type I
I 型两头锁定式电路板间隔柱



Specifications: RoHS ✓
规格

Material: Nylon 66
Colour: Natural

材料：尼龙 66
颜色：本色

- Provides spacing between the PC board and chassis, or between circuit boards
- 确保印刷电路板和底板之间或电路板之间的间距

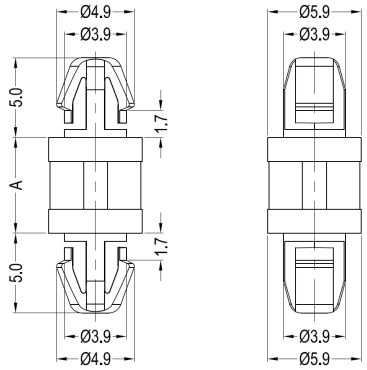

Fig.1 / 图 1

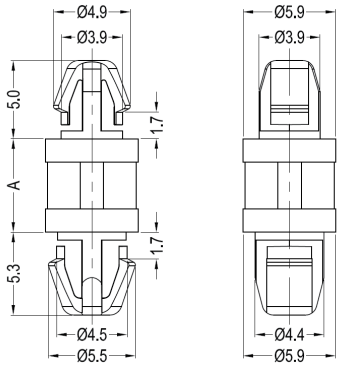

Fig.2 / 图 2

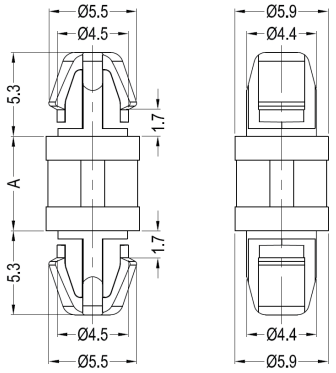

Fig.3 / 图 3

Part Number and Flammability 零件号和阻燃等级		Dimensions 尺寸					Fig. 图
		A	Top Hole 顶端安装孔		Bottom Hole 底部安装孔		
UL94V-2	UL94V-0		Hole Size 孔径	Panel Thickness 面板厚度	Hole Size 孔径	Panel Thickness 面板厚度	
0561101	0561001	3.0	4.0	1.6	4.0	1.6	1
0561102	0561002	4.0	4.0	1.6	4.0	1.6	1
0561103	0561003	6.0	4.0	1.6	4.0	1.6	1
0561104	0561004	8.0	4.0	1.6	4.0	1.6	1
0561105	0561005	10.0	4.0	1.6	4.0	1.6	1
0561106	0561006	12.0	4.0	1.6	4.0	1.6	1
0561107	0561007	14.0	4.0	1.6	4.0	1.6	1
0561108	0561008	16.0	4.0	1.6	4.0	1.6	1
0561109	0561009	18.0	4.0	1.6	4.0	1.6	1
0562101	0562001	3.0	4.0	1.6	4.8	1.6	2
0562102	0562002	4.0	4.0	1.6	4.8	1.6	2
0562103	0562003	6.0	4.0	1.6	4.8	1.6	2
0562104	0562004	8.0	4.0	1.6	4.8	1.6	2
0562105	0562005	10.0	4.0	1.6	4.8	1.6	2
0562106	0562006	12.0	4.0	1.6	4.8	1.6	2
0562107	0562007	14.0	4.0	1.6	4.8	1.6	2
0562108	0562008	16.0	4.0	1.6	4.8	1.6	2
0562109	0562009	18.0	4.0	1.6	4.8	1.6	2
0563101	0563001	3.0	4.8	1.6	4.8	1.6	3
0563102	0563002	4.0	4.8	1.6	4.8	1.6	3
0563103	0563003	6.0	4.8	1.6	4.8	1.6	3
0563104	0563004	8.0	4.8	1.6	4.8	1.6	3
0563105	0563005	10.0	4.8	1.6	4.8	1.6	3
0563106	0563006	12.0	4.8	1.6	4.8	1.6	3
0563107	0563007	14.0	4.8	1.6	4.8	1.6	3
0563108	0563008	16.0	4.8	1.6	4.8	1.6	3
0563109	0563009	18.0	4.8	1.6	4.8	1.6	3



Dual Locking Circuit Board Supports - Type II
II 型两头锁定式电路板间隔柱

- Provides spacing between the PC board and chassis, or between circuit boards
- 确保印刷电路板和底板之间或电路板之间的间距

Specifications: 规格 — RoHS ✓

Material: Nylon 66

材料：尼龙 66

Part Number, Flammability and Colour 零件号，阻燃等级和颜色				Dimensions 尺寸					Fig. 图
					Top Hole 顶端安装孔		Bottom Hole 底部安装孔		
UL94V-2		UL94V-0		A	Hole Size 孔径	Panel Thickness 面板厚度	Hole Size 孔径	Panel Thickness 面板厚度	
Natural 本色	Black 黑色	Natural 本色	Black 黑色						
0521010	0521010 -BK	0521110	0521110-BK*	4.8	3.18	0.79 - 1.98	3.18	0.79 - 1.98	1
0521011	0521011 -BK	0521111	0521111-BK*	6.4	3.18	0.79 - 1.98	3.18	0.79 - 1.98	1
0521012	0521012 -BK	0521112	0521112-BK*	7.9	3.18	0.79 - 1.98	3.18	0.79 - 1.98	1
0521013	0521013 -BK	0521113	0521113-BK*	9.5	3.18	0.79 - 1.98	3.18	0.79 - 1.98	1
0521014	0521014 -BK	0521114	0521114-BK*	11.1	3.18	0.79 - 1.98	3.18	0.79 - 1.98	1
0521015	0521015 -BK	0521115	0521115-BK*	12.7	3.18	0.79 - 1.98	3.18	0.79 - 1.98	1
0521016	0521016 -BK	0521116	0521116-BK*	14.3	3.18	0.79 - 1.98	3.18	0.79 - 1.98	1
0521017	0521017 -BK	0521117	0521117-BK*	15.9	3.18	0.79 - 1.98	3.18	0.79 - 1.98	1
0521018	0521018 -BK	0521118	0521118-BK*	22.2	3.18	0.79 - 1.98	3.18	0.79 - 1.98	1
0521060	0521060-BK*	0521160	0521160-BK*	4.8	3.5	0.8 - 2.0	3.5	0.8 - 2.0	2
0521061	0521061-BK*	0521161	0521161-BK*	6.4	3.5	0.8 - 2.0	3.5	0.8 - 2.0	2
0521062	0521062-BK*	0521162	0521162-BK*	7.9	3.5	0.8 - 2.0	3.5	0.8 - 2.0	2
0521063	0521063-BK*	0521163	0521163-BK*	9.5	3.5	0.8 - 2.0	3.5	0.8 - 2.0	2
0521064	0521064-BK*	0521164	0521164-BK*	11.1	3.5	0.8 - 2.0	3.5	0.8 - 2.0	2
0521065	0521065-BK*	0521165	0521165-BK*	12.7	3.5	0.8 - 2.0	3.5	0.8 - 2.0	2
0521066	0521066-BK*	0521166	0521166-BK*	14.3	3.5	0.8 - 2.0	3.5	0.8 - 2.0	2
0521067	0521067-BK*	0521167	0521167-BK*	15.9	3.5	0.8 - 2.0	3.5	0.8 - 2.0	2
0521068	0521068-BK*	0521168	0521168-BK*	22.2	3.5	0.8 - 2.0	3.5	0.8 - 2.0	2

* Non-stock item, could be available subject to minimum order quantity

* 非库存产品，达到最小订货量可以供货

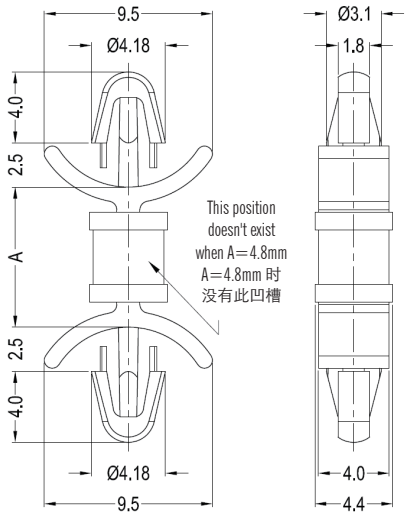

Fig.1 / 图 1

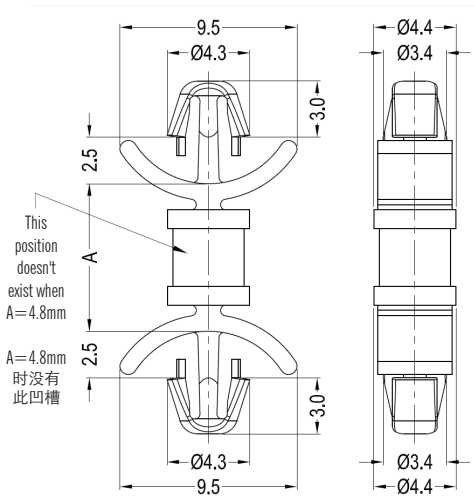

Fig.2 / 图 2

Tel: +86 512 6733 5586 or 6733 5583
Email: china@optimascomponents.com

Dual Locking Circuit Board Supports - Type III
III 型两头锁定式电路板间隔柱



Specifications: 规格 — RoHS ✓

Material: Nylon 66
Colour: Natural

材料：尼龙 66
颜色：本色

- Provides spacing between the PC board and chassis, or between circuit boards
- 确保印刷电路板和底板之间或电路板之间的间距

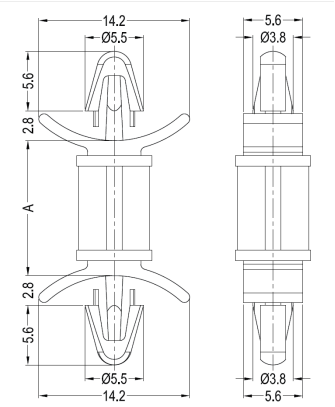

Fig.1 / 图 1

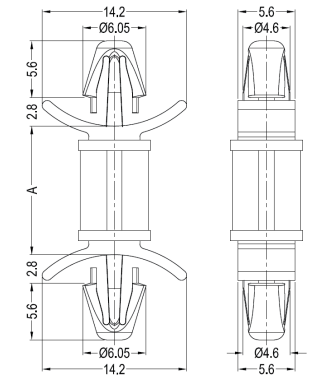

Fig.2 / 图 2

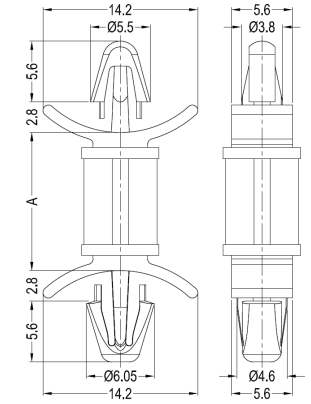

Fig.3 / 图 3

Part Number and Flammability 零件号和阻燃等级		Dimensions 尺寸					Fig. 图
		A	Top Hole 顶端安装孔		Bottom Hole 底部安装孔		
UL94V-2	UL94V-0		Hole Size 孔径	Panel Thickness 面板厚度	Hole Size 孔径	Panel Thickness 面板厚度	
0521020	0521120	4.8	4.0	0.79 - 1.98	4.0	0.79 - 1.98	1
0521021	0521121	6.4	4.0	0.79 - 1.98	4.0	0.79 - 1.98	1
0521022	0521122	7.9	4.0	0.79 - 1.98	4.0	0.79 - 1.98	1
0521023	0521123	9.5	4.0	0.79 - 1.98	4.0	0.79 - 1.98	1
0521024	0521124	11.1	4.0	0.79 - 1.98	4.0	0.79 - 1.98	1
0521025	0521125	12.7	4.0	0.79 - 1.98	4.0	0.79 - 1.98	1
0521026	0521126	14.3	4.0	0.79 - 1.98	4.0	0.79 - 1.98	1
0521027	0521127	15.9	4.0	0.79 - 1.98	4.0	0.79 - 1.98	1
0521028	0521128	19.1	4.0	0.79 - 1.98	4.0	0.79 - 1.98	1
0521029	0521129	22.2	4.0	0.79 - 1.98	4.0	0.79 - 1.98	1
0522020	0522120	4.8	4.75	0.79 - 1.98	4.75	0.79 - 1.98	2
0522021	0522121	6.4	4.75	0.79 - 1.98	4.75	0.79 - 1.98	2
0522022	0522122	7.9	4.75	0.79 - 1.98	4.75	0.79 - 1.98	2
0522023	0522123	9.5	4.75	0.79 - 1.98	4.75	0.79 - 1.98	2
0522024	0522124	11.1	4.75	0.79 - 1.98	4.75	0.79 - 1.98	2
0522025	0522125	12.7	4.75	0.79 - 1.98	4.75	0.79 - 1.98	2
0522026	0522126	14.3	4.75	0.79 - 1.98	4.75	0.79 - 1.98	2
0522027	0522127	15.9	4.75	0.79 - 1.98	4.75	0.79 - 1.98	2
0522028	0522128	19.1	4.75	0.79 - 1.98	4.75	0.79 - 1.98	2
0522029	0522129	22.2	4.75	0.79 - 1.98	4.75	0.79 - 1.98	2
0523020	0523120	4.8	4.0	0.79 - 1.98	4.75	0.79 - 1.98	3
0523021	0523121	6.4	4.0	0.79 - 1.98	4.75	0.79 - 1.98	3
0523022	0523122	7.9	4.0	0.79 - 1.98	4.75	0.79 - 1.98	3
0523023	0523123	9.5	4.0	0.79 - 1.98	4.75	0.79 - 1.98	3
0523024	0523124	11.1	4.0	0.79 - 1.98	4.75	0.79 - 1.98	3
0523025	0523125	12.7	4.0	0.79 - 1.98	4.75	0.79 - 1.98	3
0523026	0523126	14.3	4.0	0.79 - 1.98	4.75	0.79 - 1.98	3
0523027	0523127	15.9	4.0	0.79 - 1.98	4.75	0.79 - 1.98	3
0523028	0523128	19.1	4.0	0.79 - 1.98	4.75	0.79 - 1.98	3
0523029	0523129	22.2	4.0	0.79 - 1.98	4.75	0.79 - 1.98	3



Dual Locking Mini Circuit Board Supports
两头锁定式微型电路板间隔柱

- Easy to install - simply snap into place to hold the PCB in position
- 易于安装 - 只要将其卡入就能将印刷电路板固定到位

Specifications: 规格 — **RoHS ✓**

Material: Nylon 66

材料：尼龙 66

Part Number, Flammability and Colour 零件号，阻燃等级和颜色				Dimensions 尺寸					Fig. 图
				A	Top Hole 顶端安装孔		Bottom Hole 底部安装孔		
UL94V-2		UL94V-0			Hole Size 孔径	Panel Thickness 面板厚度	Hole Size 孔径	Panel Thickness 面板厚度	
Natural 本色	Black 黑色	Natural 本色	Black 黑色						
0541001	0541001-BK	0541101	0541101-BK	2.0	2.5	1.57	2.5	1.57	1
0541002	0541002-BK	0541102	0541102-BK	3.0	2.5	1.57	2.5	1.57	1
0541003	0541003-BK	0541103	0541103-BK	4.0	2.5	1.57	2.5	1.57	1
0541004	0541004-BK	0541104	0541104-BK	5.0	2.5	1.57	2.5	1.57	1
0541005	0541005-BK	0541105	0541105-BK	6.0	2.5	1.57	2.5	1.57	1
0541006	0541006-BK	0541106	0541106-BK	7.0	2.5	1.57	2.5	1.57	1
0541007	0541007-BK	0541107	0541107-BK	8.0	2.5	1.57	2.5	1.57	1
0541008	0541008-BK	0541108	0541108-BK	9.0	2.5	1.57	2.5	1.57	1
0541009	0541009-BK	0541109	0541109-BK	10.0	2.5	1.57	2.5	1.57	1
0541010	0541010-BK	0541110	0541110-BK	12.0	2.5	1.57	2.5	1.57	1
0541011	0541011-BK	0541111	0541111-BK	14.0	2.5	1.57	2.5	1.57	1
0541012	0541012-BK	0541112	0541112-BK	16.0	2.5	1.57	2.5	1.57	1
0541013	0541013-BK	0541113	0541113-BK	18.0	2.5	1.57	2.5	1.57	1
0541014	0541014-BK	0541114	0541114-BK	20.0	2.5	1.57	2.5	1.57	1
0541015	0541015-BK	0541115	0541115-BK	22.0	2.5	1.57	2.5	1.57	1
0541016	0541016-BK	0541116	0541116-BK	26.5	2.5	1.57	2.5	1.57	1
0542001	0542001-BK	0542101	0542101-BK	2.0	3.5	1.57	3.5	1.57	2
0542002	0542002-BK	0542102	0542102-BK	3.0	3.5	1.57	3.5	1.57	2
0542003	0542003-BK	0542103	0542103-BK	4.0	3.5	1.57	3.5	1.57	2
0542004	0542004-BK*	0542104	0542104-BK	5.0	3.5	1.57	3.5	1.57	2
0542005	0542005-BK	0542105	0542105-BK	6.0	3.5	1.57	3.5	1.57	2
0542006	0542006-BK	0542106	0542106-BK	7.0	3.5	1.57	3.5	1.57	2
0542007	0542007-BK	0542107	0542107-BK	8.0	3.5	1.57	3.5	1.57	2
0542008	0542008-BK	0542108	0542108-BK	9.0	3.5	1.57	3.5	1.57	2
0542009	0542009-BK	0542109	0542109-BK	10.0	3.5	1.57	3.5	1.57	2
0542010	0542010-BK	0542110	0542110-BK	12.0	3.5	1.57	3.5	1.57	2
0542011	0542011-BK	0542111	0542111-BK	14.0	3.5	1.57	3.5	1.57	2
0542012	0542012-BK	0542112	0542112-BK	16.0	3.5	1.57	3.5	1.57	2
0542013	0542013-BK	0542113	0542113-BK	18.0	3.5	1.57	3.5	1.57	2
0542014	0542014-BK	0542114	0542114-BK	20.0	3.5	1.57	3.5	1.57	2
0542015	0542015-BK	0542115	0542115-BK	22.0	3.5	1.57	3.5	1.57	2
0542016	0542016-BK	0542116	0542116-BK	26.5	3.5	1.57	3.5	1.57	2

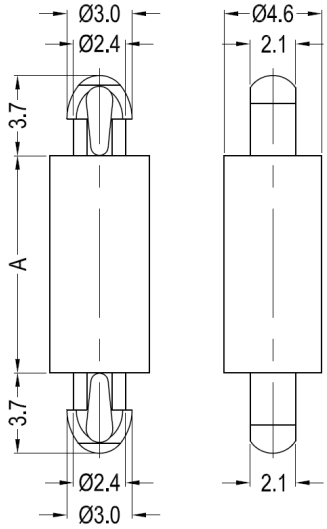

Fig.1 / 图 1

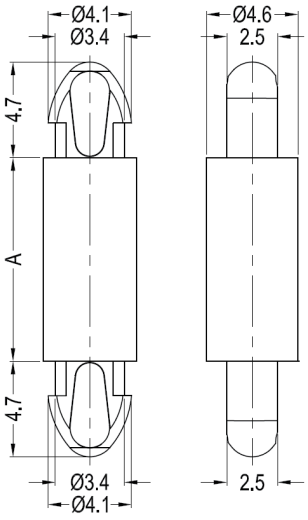

Fig.2 / 图 2

* Non-stock item, could be available subject to minimum order quantity
* 非库存产品，达到最小订货量可以供货

Continued...
转下页 ...

Tel: +86 512 6733 5586 or 6733 5583
Email: china@optimascomponents.com

Dual Locking Mini Circuit Board Supports
两头锁定式微型电路板间隔柱



Specifications: 规格 — **RoHS ✓**

Material: Nylon 66
Colour: Natural

材料：尼龙 66
颜色：本色

- Easy to install - simply snap into place to hold the PCB in position
- 易于安装 - 只要将其卡入就能将印刷电路板固定到位

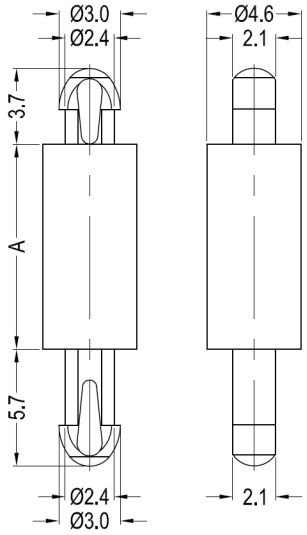

Fig.3 / 图 3

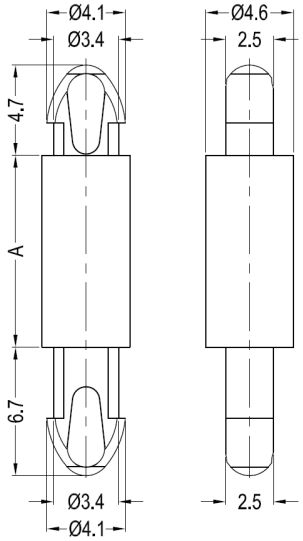

Fig.4 / 图 4

Part Number and Flammability 零件号和阻燃等级		Dimensions 尺寸					Fig. 图
		A	Top Hole 顶端安装孔		Bottom Hole 底部安装孔		
UL94V-2	UL94V-0		Hole Size 孔径	Panel Thickness 面板厚度	Hole Size 孔径	Panel Thickness 面板厚度	
0541020	0541120	2.0	2.5	1.57	2.6	3.6	3
0541021	0541121	3.0	2.5	1.57	2.6	3.6	3
0541022	0541122	4.0	2.5	1.57	2.6	3.6	3
0541023	0541123	5.0	2.5	1.57	2.6	3.6	3
0541024	0541124	6.0	2.5	1.57	2.6	3.6	3
0541025	0541125	7.0	2.5	1.57	2.6	3.6	3
0541026	0541126	8.0	2.5	1.57	2.6	3.6	3
0541027	0541127	10.0	2.5	1.57	2.6	3.6	3
0541028	0541128	12.0	2.5	1.57	2.6	3.6	3
0541029	0541129	14.0	2.5	1.57	2.6	3.6	3
0541030	0541130	16.0	2.5	1.57	2.6	3.6	3
0541031	0541131	18.0	2.5	1.57	2.6	3.6	3
0541032	0541132	20.0	2.5	1.57	2.6	3.6	3
0541033	0541133	22.0	2.5	1.57	2.6	3.6	3
0542020	0542120	2.0	3.5	1.57	3.5	3.6	4
0542021	0542121	3.0	3.5	1.57	3.5	3.6	4
0542022	0542122	4.0	3.5	1.57	3.5	3.6	4
0542023	0542123	5.0	3.5	1.57	3.5	3.6	4
0542024	0542124	6.0	3.5	1.57	3.5	3.6	4
0542025	0542125	7.0	3.5	1.57	3.5	3.6	4
0542026	0542126	8.0	3.5	1.57	3.5	3.6	4
0542027	0542127	10.0	3.5	1.57	3.5	3.6	4
0542028	0542128	12.0	3.5	1.57	3.5	3.6	4
0542029	0542129	14.0	3.5	1.57	3.5	3.6	4
0542030	0542130	16.0	3.5	1.57	3.5	3.6	4
0542031	0542131	18.0	3.5	1.57	3.5	3.6	4
0542032	0542132	20.0	3.5	1.57	3.5	3.6	4
0542033	0542133	22.0	3.5	1.57	3.5	3.6	4

Continued...
转下页 ...

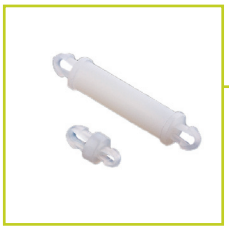

Dual Locking Mini Circuit Board Supports
两头锁定式微型电路板间隔柱

- Easy to install - simply snap into place to hold the PCB in position
- Low Profile

- 易于安装 - 只要将其卡入就能将印刷电路板固定到位
- 外形较小

Specifications: 规格 — **RoHS ✓**

Material: Nylon 66 材料：尼龙 66

Part Number, Flammability and Colour 零件号，阻燃等级和颜色				Dimensions 尺寸					Fig. 图
				A	Top Hole 顶端安装孔		Bottom Hole 底部安装孔		
UL94V-2		UL94V-0			Hole Size 孔径	Panel Thickness 面板厚度	Hole Size 孔径	Panel Thickness 面板厚度	
Natural 本色	Black 黑色	Natural 本色	Black 黑色						
0541040	0541040-BK	0541140	0541140-BK*	1.6	2.54	1.63	2.54	1.63	5
0541041	0541041-BK	0541141	0541141-BK*	3.2	2.54	1.63	2.54	1.63	5
0541042	0541042-BK	0541142	0541142-BK*	4.8	2.54	1.63	2.54	1.63	5
0541043	0541043-BK	0541143	0541143-BK*	6.4	2.54	1.63	2.54	1.63	5
0541044	0541044-BK	0541144	0541144-BK*	7.9	2.54	1.63	2.54	1.63	5
0541045	0541045-BK	0541145	0541145-BK*	9.5	2.54	1.63	2.54	1.63	5
0541046	0541046-BK	0541146	0541146-BK*	11.1	2.54	1.63	2.54	1.63	5
0541047	0541047-BK	0541147	0541147-BK*	12.7	2.54	1.63	2.54	1.63	5
0541048	0541048-BK	0541148	0541148-BK*	14.3	2.54	1.63	2.54	1.63	5
0541049	0541049-BK	0541149	0541149-BK*	15.9	2.54	1.63	2.54	1.63	5
0541050	0541050-BK	0541150	0541150-BK*	22.2	2.54	1.63	2.54	1.63	5
0542040	0542040-BK*	0542140	0542140-BK*	1.6	2.5	1.6	2.0	1.0	6
0542041	0542041-BK*	0542141	0542141-BK*	3.2	2.5	1.6	2.0	1.0	6
0542042	0542042-BK*	0542142	0542142-BK*	4.8	2.5	1.6	2.0	1.0	6
0542043	0542043-BK*	0542143	0542143-BK*	6.4	2.5	1.6	2.0	1.0	6
0542044	0542044-BK*	0542144	0542144-BK*	7.9	2.5	1.6	2.0	1.0	6
0542045	0542045-BK*	0542145	0542145-BK*	9.5	2.5	1.6	2.0	1.0	6

* Non-stock item, could be available subject to minimum order quantity
* 非库存产品，达到最小订货量可以供货

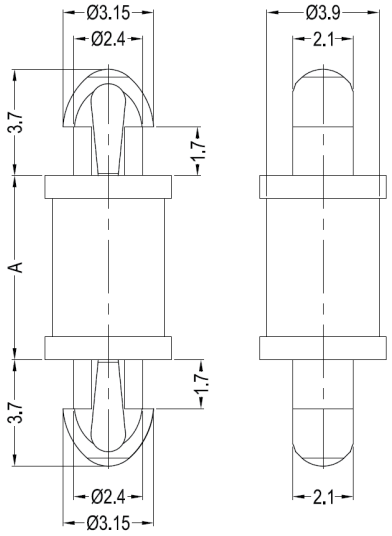

Fig.5 / 图 5

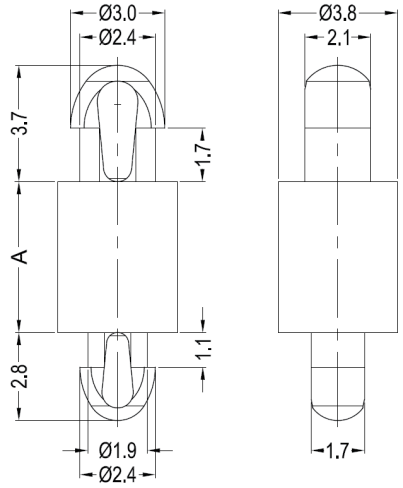

Fig.6 / 图 6

Tel: +86 512 6733 5586 or 6733 5583
Email: china@optimascomponents.com

Support Posts
支撑柱



Specifications: 规格 — **RoHS ✓**

Material: Nylon 66

材料：尼龙 66

- Easy to install - simply snap into place to hold the PCB in position
- 易于安装 - 只要将其卡入就能将印刷电路板固定到位

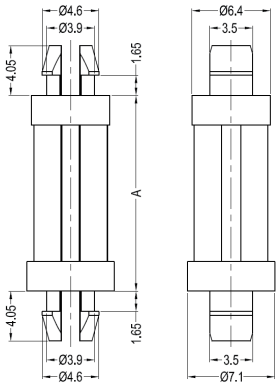

Fig.1 / 图 1

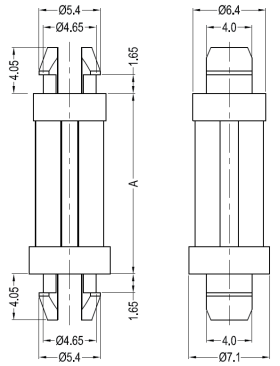

Fig.2 / 图 2

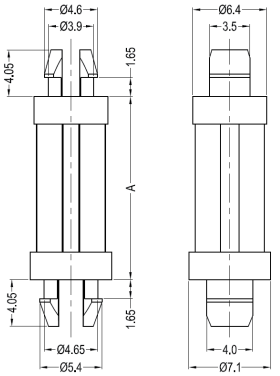

Fig.3 / 图 3

Part Number, Flammability and Colour 零件号，阻燃等级和颜色				Dimensions 尺寸					Fig. 图
				A	Top Hole 顶端安装孔		Bottom Hole 底部安装孔		
UL94V-2		UL94V-0			Hole Size 孔径	Panel Thickness 面板厚度	Hole Size 孔径	Panel Thickness 面板厚度	
Natural 本色	Black 黑色	Natural 本色	Black 黑色						
0521040	0521040-BK	0521140	0521140-BK	4.8	4.0	1.57	4.0	1.57	1
0521041	0521041-BK	0521141	0521141-BK	6.4	4.0	1.57	4.0	1.57	1
0521042	0521042-BK	0521142	0521142-BK	7.9	4.0	1.57	4.0	1.57	1
0521043	0521043-BK	0521143	0521143-BK	9.5	4.0	1.57	4.0	1.57	1
0521044	0521044-BK	0521144	0521144-BK	11.1	4.0	1.57	4.0	1.57	1
0521045	0521045-BK	0521145	0521145-BK	12.7	4.0	1.57	4.0	1.57	1
0521046	0521046-BK	0521146	0521146-BK	14.3	4.0	1.57	4.0	1.57	1
0521047	0521047-BK	0521147	0521147-BK	15.9	4.0	1.57	4.0	1.57	1
0521048	0521048-BK	0521148	0521148-BK	19.1	4.0	1.57	4.0	1.57	1
0521049	0521049-BK	0521149	0521149-BK	22.2	4.0	1.57	4.0	1.57	1
0521050	0521050-BK	0521150	0521150-BK	25.4	4.0	1.57	4.0	1.57	1
0522040	0522040-BK	0522140	0522140-BK	4.8	4.75	1.57	4.75	1.57	2
0522041	0522041-BK	0522141	0522141-BK	6.4	4.75	1.57	4.75	1.57	2
0522042	0522042-BK	0522142	0522142-BK	7.9	4.75	1.57	4.75	1.57	2
0522043	0522043-BK	0522143	0522143-BK	9.5	4.75	1.57	4.75	1.57	2
0522044	0522044-BK	0522144	0522144-BK	11.1	4.75	1.57	4.75	1.57	2
0522045	0522045-BK	0522145	0522145-BK	12.7	4.75	1.57	4.75	1.57	2
0522046	0522046-BK	0522146	0522146-BK	14.3	4.75	1.57	4.75	1.57	2
0522047	0522047-BK	0522147	0522147-BK	15.9	4.75	1.57	4.75	1.57	2
0522048	0522048-BK	0522148	0522148-BK	19.1	4.75	1.57	4.75	1.57	2
0522049	0522049-BK	0522149	0522149-BK	22.2	4.75	1.57	4.75	1.57	2
0522050	0522050-BK	0522150	0522150-BK	25.4	4.75	1.57	4.75	1.57	2
0523040	0523040-BK	0523140	0523140-BK	4.8	4.0	1.57	4.75	1.57	3
0523041	0523041-BK	0523141	0523141-BK	6.4	4.0	1.57	4.75	1.57	3
0523042	0523042-BK	0523142	0523142-BK	7.9	4.0	1.57	4.75	1.57	3
0523043	0523043-BK	0523143	0523143-BK	9.5	4.0	1.57	4.75	1.57	3
0523044	0523044-BK	0523144	0523144-BK	11.1	4.0	1.57	4.75	1.57	3
0523045	0523045-BK	0523145	0523145-BK	12.7	4.0	1.57	4.75	1.57	3
0523046	0523046-BK	0523146	0523146-BK	14.3	4.0	1.57	4.75	1.57	3
0523047	0523047-BK	0523147	0523147-BK	15.9	4.0	1.57	4.75	1.57	3
0523048	0523048-BK	0523148	0523148-BK	19.1	4.0	1.57	4.75	1.57	3
0523049	0523049-BK	0523149	0523149-BK	22.2	4.0	1.57	4.75	1.57	3
0523050	0523050-BK	0523150	0523150-BK	25.4	4.0	1.57	4.75	1.57	3



Mini Support Posts - Type I
I 型微型支撑柱

- Easy to install - simply snap into place to hold the PCB in position
- 易于安装 - 只要将其卡入就能将印刷电路板固定到位

Specifications: 规格 — RoHS ✓

Material: Nylon 66
Colour: Natural

材料：尼龙 66
颜色：本色

Part Number and Flammability 零件号和阻燃等级		Dimensions 尺寸					Fig. 图
		A	Top Hole 顶端安装孔		Bottom Hole 底部安装孔		
UL94V-2	UL94V-0		Hole Size 孔径	Panel Thickness 面板厚度	Hole Size 孔径	Panel Thickness 面板厚度	
0521070	0521170	4.8	4.0	1.6	4.0	1.6	1
0521071	0521171	6.4	4.0	1.6	4.0	1.6	1
0521072	0521172	7.9	4.0	1.6	4.0	1.6	1
0521073	0521173	9.5	4.0	1.6	4.0	1.6	1
0521074	0521174	11.1	4.0	1.6	4.0	1.6	1
0521075	0521175	12.7	4.0	1.6	4.0	1.6	1
0521076	0521176	15.9	4.0	1.6	4.0	1.6	1
0521077	0521177	17.5	4.0	1.6	4.0	1.6	1
0521078	0521178	19.1	4.0	1.6	4.0	1.6	1
0521079	0521179	22.2	4.0	1.6	4.0	1.6	1
0541060	0541160*	3.2	3.9	1.57	3.9	1.57	2
0541061	0541161*	4.8	3.9	1.57	3.9	1.57	2
0541062	0541162*	6.4	3.9	1.57	3.9	1.57	2
0541063	0541163*	7.9	3.9	1.57	3.9	1.57	2
0541064	0541164*	9.5	3.9	1.57	3.9	1.57	2
0541065	0541165*	11.1	3.9	1.57	3.9	1.57	2
0541066	0541166*	12.7	3.9	1.57	3.9	1.57	2
0541067	0541167*	15.9	3.9	1.57	3.9	1.57	2
0541068	0541168*	17.5	3.9	1.57	3.9	1.57	2
0541069	0541169*	19.1	3.9	1.57	3.9	1.57	2
0541070	0541170*	22.2	3.9	1.57	3.9	1.57	2
0541071	0541171*	25.4	3.9	1.57	3.9	1.57	2
0541072	0541172*	31.8	3.9	1.57	3.9	1.57	2
0541073	0541173*	34.9	3.9	1.57	3.9	1.57	2

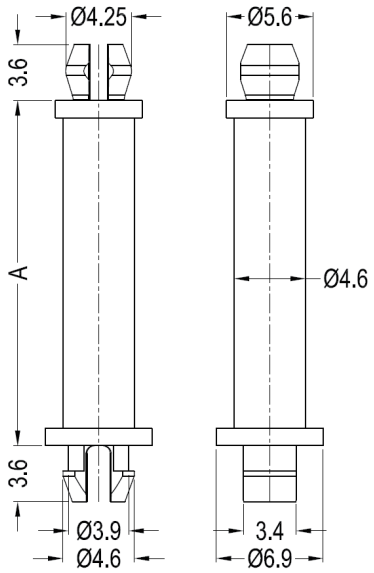

Fig.1 / 图 1

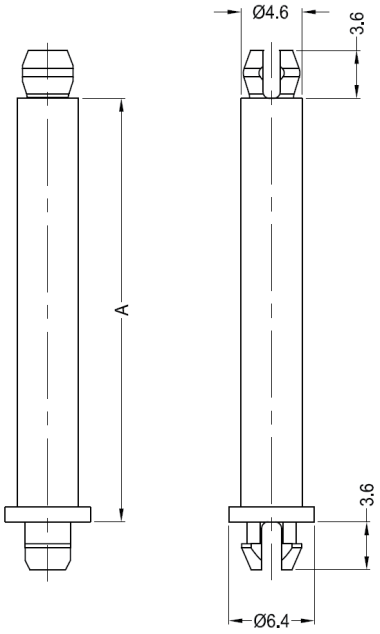

Fig.2 / 图 2

* Non-stock item, could be available subject to minimum order quantity
* 非库存产品，达到最小订货量可以供货

Tel: +86 512 6733 5586 or 6733 5583
Email: china@optimascomponents.com

Mini Support Posts - Type II
II 型微型支撑柱



Specifications: RoHS ✓
规格

Material: Nylon 66
Colour: Natural

材料：尼龙 66
颜色：本色

- Easy to install - simply snap into place to hold the PCB in position
- 易于安装 - 只要将其卡入就能将印刷电路板固定到位

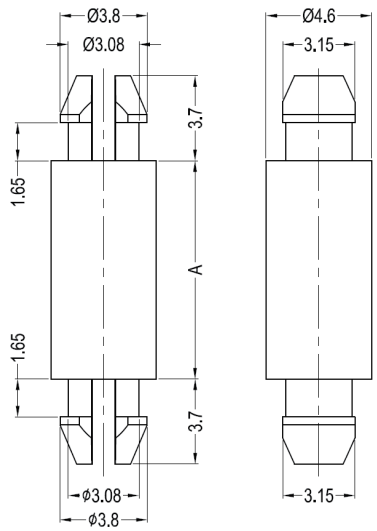

Fig.1 / 图 1

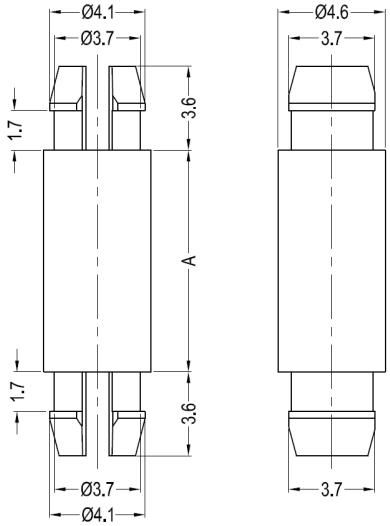

Fig.2 / 图 2

Part Number and Flammability 零件号和阻燃等级		Dimensions 尺寸					Fig. 图
		A	Top Hole 顶端安装孔		Bottom Hole 底部安装孔		
UL94V-2	UL94V-0		Hole Size 孔径	Panel Thickness 面板厚度	Hole Size 孔径	Panel Thickness 面板厚度	
0521080	0521180	3.2	3.18	1.57	3.18	1.57	1
0521081	0521181	4.8	3.18	1.57	3.18	1.57	1
0521082	0521182	6.4	3.18	1.57	3.18	1.57	1
0521083	0521183	7.9	3.18	1.57	3.18	1.57	1
0521084	0521184	9.5	3.18	1.57	3.18	1.57	1
0521085	0521185	11.1	3.18	1.57	3.18	1.57	1
0521086	0521186	12.7	3.18	1.57	3.18	1.57	1
0521087	0521187	14.3	3.18	1.57	3.18	1.57	1
0521088	0521188	15.9	3.18	1.57	3.18	1.57	1
0521089	0521189	17.5	3.18	1.57	3.18	1.57	1
0521090	0521190	19.1	3.18	1.57	3.18	1.57	1
0521091	0521191	20.6	3.18	1.57	3.18	1.57	1
0521092	0521192	22.2	3.18	1.57	3.18	1.57	1
0521093	0521193	25.4	3.18	1.57	3.18	1.57	1
0521094	0521194	28.6	3.18	1.57	3.18	1.57	1
0521095	0521195	31.7	3.18	1.57	3.18	1.57	1
0521096	0521196	34.9	3.18	1.57	3.18	1.57	1
0521097	0521197	38.1	3.18	1.57	3.18	1.57	1
0522080	0522180	3.2	3.86	1.57	3.86	1.57	2
0522081	0522181	4.8	3.86	1.57	3.86	1.57	2
0522082	0522182	6.4	3.86	1.57	3.86	1.57	2
0522083	0522183	7.9	3.86	1.57	3.86	1.57	2
0522084	0522184	9.5	3.86	1.57	3.86	1.57	2
0522085	0522185	11.1	3.86	1.57	3.86	1.57	2
0522086	0522186	12.7	3.86	1.57	3.86	1.57	2
0522087	0522187	14.3	3.86	1.57	3.86	1.57	2
0522088	0522188	15.9	3.86	1.57	3.86	1.57	2
0522089	0522189	17.5	3.86	1.57	3.86	1.57	2
0522090	0522190	19.1	3.86	1.57	3.86	1.57	2
0522091	0522191	20.6	3.86	1.57	3.86	1.57	2
0522092	0522192	22.2	3.86	1.57	3.86	1.57	2
0522093	0522193	25.4	3.86	1.57	3.86	1.57	2
0522094	0522194	28.6	3.86	1.57	3.86	1.57	2
0522095	0522195	31.7	3.86	1.57	3.86	1.57	2
0522096	0522196	34.9	3.86	1.57	3.86	1.57	2
0522097	0522197	38.1	3.86	1.57	3.86	1.57	2



Key Slot Locking Support Posts
键槽型卡扣支撑柱

- Key slot design allows for easy removal
- Larger base on key slot side for easy identification of mounting end

- 键槽设计便于拆卸
- 键槽侧较大的底座便于安装端的识别

Specifications: 规格 — **RoHS ✓**

Material: Nylon 66 — 材料：尼龙 66
Colour: Natural — 颜色：本色
Flammability Rating: UL94V2 — 阻燃等级：UL94V2

Part Number 零件号	Dimensions 尺寸					Fig. 图
	A	Top Hole 顶端安装孔		Bottom Hole 底部安装孔		
		Hole Size 孔径	Panel Thickness 面板厚度	Hole Size 孔径	Panel Thickness 面板厚度	
0541080	3.2	4.0	1.57	See Mounting Key Slot Detail / 见键槽安装孔细节	1.57	1
0541082	6.4	4.0	1.57	See Mounting Key Slot Detail / 见键槽安装孔细节	1.57	1
0541083	9.5	4.0	1.57	See Mounting Key Slot Detail / 见键槽安装孔细节	1.57	1
0541084	12.7	4.0	1.57	See Mounting Key Slot Detail / 见键槽安装孔细节	1.57	1
0542081	4.8	4.0	1.57	See Mounting Key Slot Detail / 见键槽安装孔细节	1.57	2
0542082	6.4	4.0	1.57	See Mounting Key Slot Detail / 见键槽安装孔细节	1.57	2
0542083	9.5	4.0	1.57	See Mounting Key Slot Detail / 见键槽安装孔细节	1.57	2
0542084	12.7	4.0	1.57	See Mounting Key Slot Detail / 见键槽安装孔细节	1.57	2
0542085	15.9	4.0	1.57	See Mounting Key Slot Detail / 见键槽安装孔细节	1.57	2

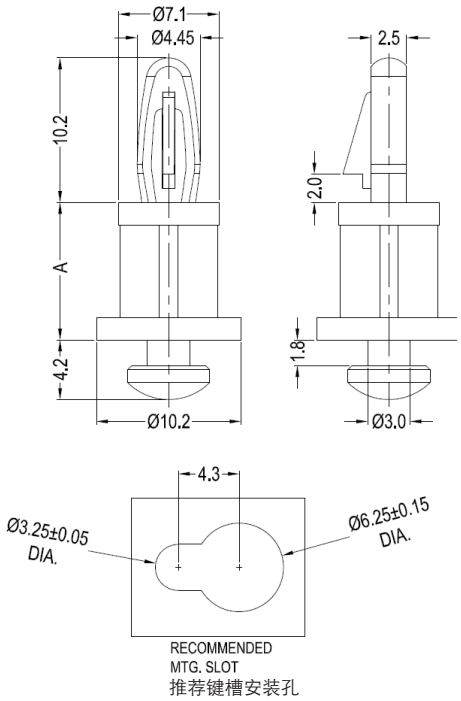

Fig.1 / 图 1

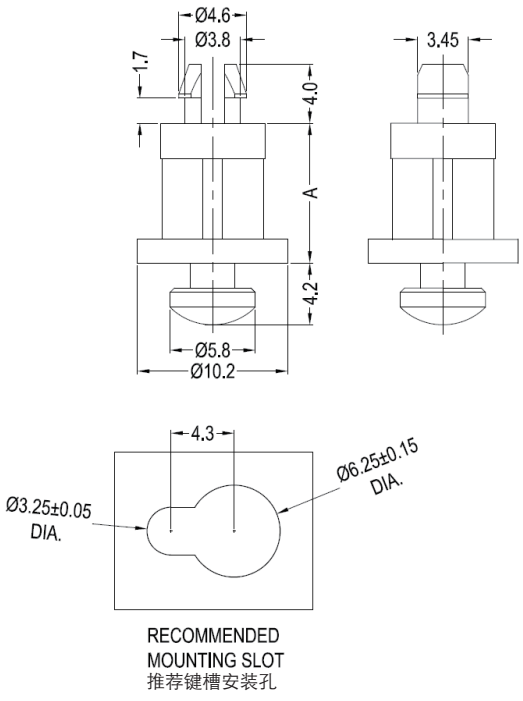

Fig.2 / 图 2

Tel: +86 512 6733 5586 or 6733 5583
Email: china@optimascomponents.com

Blind Hole Mount Circuit Board Supports - Type I
I 型盲孔安装型电路板支撑柱



Specifications: 规格 — **RoHS ✓**

Material: Nylon 66

材料：尼龙 66

- Firmly and accurately maintains a constant distance between the chassis and PC board
- 牢固而准确的保持底板与印刷电路板之间的距离

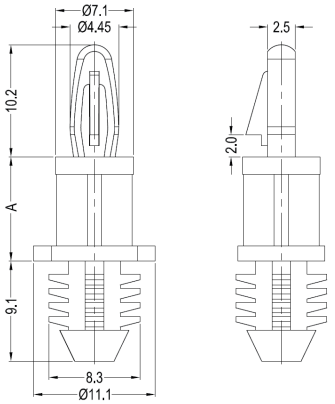

Fig.1 / 图 1

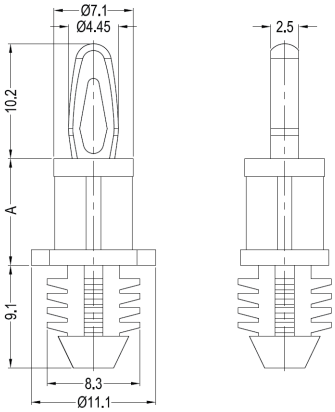

Fig.2 / 图 2

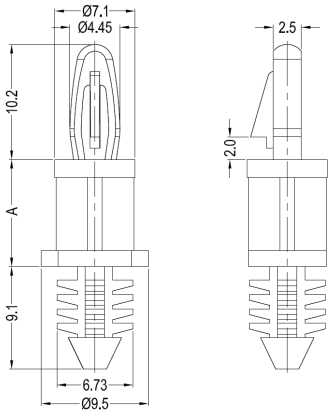

Fig.3 / 图 3

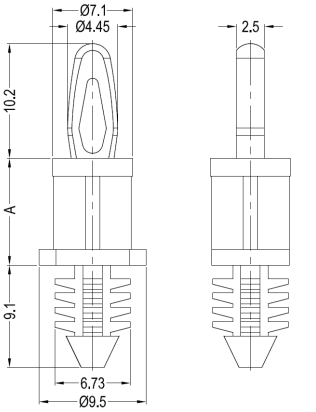

Fig.4 / 图 4

Part Number, Flammability and Colour 零件号，阻燃等级和颜色				Dimensions 尺寸					Fig. 图
				A	Top Hole 顶端安装孔		Bottom Hole 底部安装孔		
UL94V-2		UL94V-0			Hole Size 孔径	Panel Thickness 面板厚度	Hole Size 孔径	Panel Thickness 面板厚度	
Natural 本色	Black 黑色	Natural 本色	Black 黑色						
0541090	0541090-BK*	0541190	0541190-BK*	4.8	4.0	1.57	7.92	6.4	1
0541091	0541091-BK*	0541191	0541191-BK*	6.4	4.0	1.57	7.92	6.4	1
0541092	0541092-BK*	0541192	0541192-BK*	9.5	4.0	1.57	7.92	6.4	1
0541093	0541093-BK*	0541193	0541193-BK*	11.1	4.0	1.57	7.92	6.4	1
0541094	0541094-BK*	0541194	0541194-BK*	12.7	4.0	1.57	7.92	6.4	1
0541095	0541095-BK*	0541195	0541195-BK*	15.9	4.0	1.57	7.92	6.4	1
0541096	0541096-BK*	0541196	0541196-BK*	19.1	4.0	1.57	7.92	6.4	1
0541097	0541097-BK*	0541197	0541197-BK*	22.2	4.0	1.57	7.92	6.4	1
0542090	0542090-BK*	0542190	0542190-BK*	4.8	4.0	1.57	7.92	6.4	2
0542091	0542091-BK*	0542191	0542191-BK*	6.4	4.0	1.57	7.92	6.4	2
0542092	0542092-BK*	0542192	0542192-BK*	9.5	4.0	1.57	7.92	6.4	2
0542093	0542093-BK*	0542193	0542193-BK*	11.1	4.0	1.57	7.92	6.4	2
0542094	0542094-BK*	0542194	0542194-BK*	12.7	4.0	1.57	7.92	6.4	2
0542095	0542095-BK*	0542195	0542195-BK*	15.9	4.0	1.57	7.92	6.4	2
0542096	0542096-BK*	0542196	0542196-BK*	19.1	4.0	1.57	7.92	6.4	2
0542097	0542097-BK*	0542197	0542197-BK*	22.2	4.0	1.57	7.92	6.4	2
0543090	0543090-BK*	0543190	0543190-BK*	4.8	4.0	1.57	6.35	6.4	3
0543091	0543091-BK*	0543191	0543191-BK*	6.4	4.0	1.57	6.35	6.4	3
0543092	0543092-BK*	0543192	0543192-BK*	9.5	4.0	1.57	6.35	6.4	3
0543093	0543093-BK*	0543193	0543193-BK*	11.1	4.0	1.57	6.35	6.4	3
0543094	0543094-BK*	0543194	0543194-BK*	12.7	4.0	1.57	6.35	6.4	3
0543095	0543095-BK*	0543195	0543195-BK*	15.9	4.0	1.57	6.35	6.4	3
0543096	0543096-BK*	0543196	0543196-BK*	19.1	4.0	1.57	6.35	6.4	3
0543097	0543097-BK*	0543197	0543197-BK*	22.2	4.0	1.57	6.35	6.4	3
0544090	0544090-BK	0544190	0544190-BK	4.8	4.0	1.57	6.35	6.4	4
0544091	0544091-BK	0544191	0544191-BK	6.4	4.0	1.57	6.35	6.4	4
0544092	0544092-BK	0544192	0544192-BK	9.5	4.0	1.57	6.35	6.4	4
0544093	0544093-BK	0544193	0544193-BK	11.1	4.0	1.57	6.35	6.4	4
0544094	0544094-BK	0544194	0544194-BK	12.7	4.0	1.57	6.35	6.4	4
0544095	0544095-BK	0544195	0544195-BK	15.9	4.0	1.57	6.35	6.4	4
0544096	0544096-BK	0544196	0544196-BK	19.1	4.0	1.57	6.35	6.4	4
0544097	0544097-BK	0544197	0544197-BK	22.2	4.0	1.57	6.35	6.4	4

* Non-stock item, could be available subject to minimum order quantity
* 非库存产品，达到最小订货量可以供货



Blind Hole Mount Circuit Board Supports - Type II
II 型盲孔安装型电路板支撑柱

- Firmly and accurately maintains a constant distance between the chassis and PC board
- 牢固而准确的保持底板与印刷电路板之间的距离

Specifications: 规格 — RoHS ✓

Material: Nylon 66
Colour: Natural

材料：尼龙 66
颜色：本色

Part Number and Flammability 零件号和阻燃等级		Dimensions 尺寸					Fig. 图
		A	Top Hole 顶端安装孔		Bottom Hole 底部安装孔		
UL94V-2	UL94V-0		Hole Size 孔径	Panel Thickness 面板厚度	Hole Size 孔径	Panel Thickness 面板厚度	
0553001	0553101	6.4	4.0	0.79 - 1.98	7.92	6.4	1
0553002	0553102	9.5	4.0	0.79 - 1.98	7.92	6.4	1
0553003	0553103	12.7	4.0	0.79 - 1.98	7.92	6.4	1
0553004	0553104	15.9	4.0	0.79 - 1.98	7.92	6.4	1
0553005	0553105	19.1	4.0	0.79 - 1.98	7.92	6.4	1
0553006	0553106	22.2	4.0	0.79 - 1.98	7.92	6.4	1
0556001	0556101	6.4	4.0	0.79 - 1.98	6.35	6.4	2
0556002	0556102	9.5	4.0	0.79 - 1.98	6.35	6.4	2
0556003	0556103	12.7	4.0	0.79 - 1.98	6.35	6.4	2
0556004	0556104	15.9	4.0	0.79 - 1.98	6.35	6.4	2
0556005	0556105	19.1	4.0	0.79 - 1.98	6.35	6.4	2
0556006	0556106	22.2	4.0	0.79 - 1.98	6.35	6.4	2

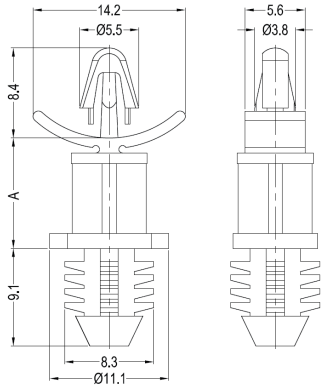

Fig.1 / 图 1

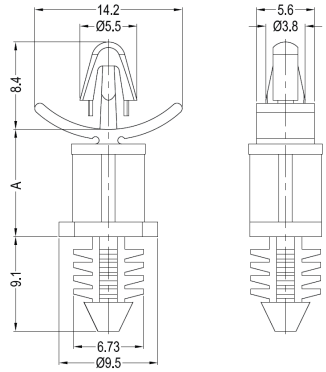

Fig.2 / 图 2



Reverse Locking Circuit Board Supports
反扣式电路板支撑柱

- Prevents the deflection of PC boards due to the weight of the mounted components
- 防止由于安装零部件的重量所导致的印刷电路板偏移

Specifications: 规格 — RoHS ✓

Material: Nylon 66
Colour: Natural

材料：尼龙 66
颜色：本色

Part Number and Flammability 零件号和阻燃等级		A	Hole Size 安装孔径	Panel Thickness 面板厚度
UL94V-2	UL94V-0			
0559001	0559101	6.4	4.75	1.5 - 1.6
0559002	0559102	7.9	4.75	1.5 - 1.6
0559003	0559103	9.5	4.75	1.5 - 1.6
0559004	0559104	11.1	4.75	1.5 - 1.6
0559005	0559105	12.7	4.75	1.5 - 1.6
0559006	0559106	14.3	4.75	1.5 - 1.6
0559007	0559107	15.9	4.75	1.5 - 1.6

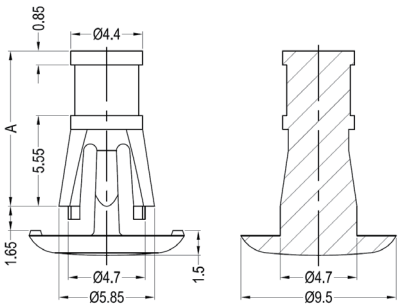

Tel: +86 512 6733 5586 or 6733 5583
Email: china@optimascomponents.com



Specifications: RoHS ✓
规格

Material: Nylon 66
Colour: Natural
Flammability Rating: UL94V2

材料：尼龙 66
颜色：本色
阻燃等级：UL94V2

- Secured to the chassis by a self-adhesive pad
- No need for screw holes in the chassis
- Quick and simple to install without the need for special tooling

- 通过背胶固定于底板上
- 不需要在底板上开螺钉孔
- 安装简便快捷而无需特殊工具

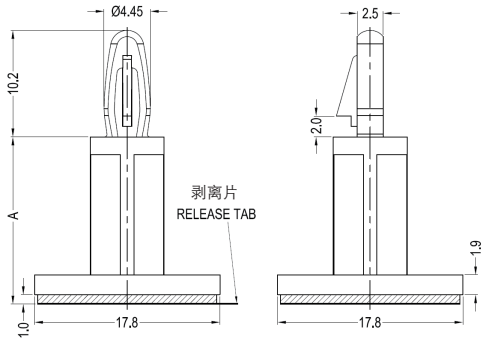

Fig.1 / 图 1

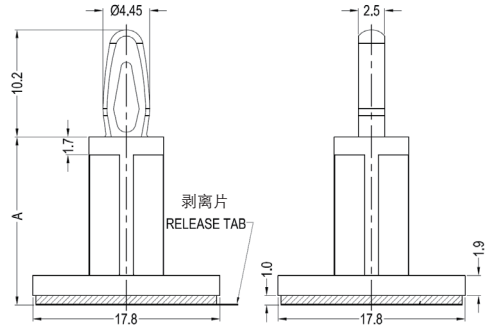

Fig.2 / 图 2

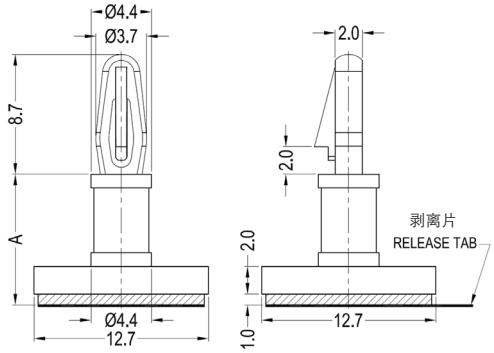

Fig.3 / 图 3

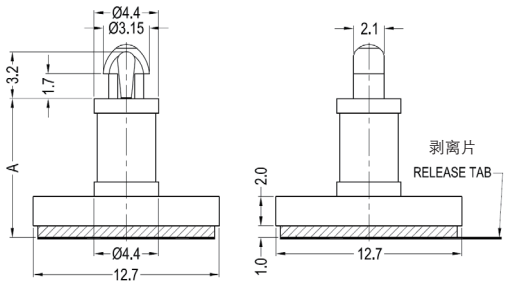

Fig.4 / 图 4

Part Number 零件号	A	Hole Size 安装孔径	Panel Thickness 面板厚度	Adhesive Tape Dimensions 背胶尺寸	Fig. 图
0564001	4.8	4.0	1.57	17.0 x 17.0 x 1.0	1
0564002	6.0	4.0	1.57	17.0 x 17.0 x 1.0	1
0564003	6.4	4.0	1.57	17.0 x 17.0 x 1.0	1
0564004	8.0	4.0	1.57	17.0 x 17.0 x 1.0	1
0564005	9.5	4.0	1.57	17.0 x 17.0 x 1.0	1
0564006	10.0	4.0	1.57	17.0 x 17.0 x 1.0	1
0564007	12.0	4.0	1.57	17.0 x 17.0 x 1.0	1
0564008	12.7	4.0	1.57	17.0 x 17.0 x 1.0	1
0564009	14.0	4.0	1.57	17.0 x 17.0 x 1.0	1
0564010	15.9	4.0	1.57	17.0 x 17.0 x 1.0	1
0564011	16.0	4.0	1.57	17.0 x 17.0 x 1.0	1
0564012	19.1	4.0	1.57	17.0 x 17.0 x 1.0	1
0564013	22.2	4.0	1.57	17.0 x 17.0 x 1.0	1
0564014	25.4	4.0	1.57	17.0 x 17.0 x 1.0	1
0564015	28.6	4.0	1.57	17.0 x 17.0 x 1.0	1
0565001	4.8	4.0	1.57	17.0 x 17.0 x 1.0	2
0565002	6.0	4.0	1.57	17.0 x 17.0 x 1.0	2
0565003	6.4	4.0	1.57	17.0 x 17.0 x 1.0	2
0565004	8.0	4.0	1.57	17.0 x 17.0 x 1.0	2
0565005	9.5	4.0	1.57	17.0 x 17.0 x 1.0	2
0565006	10.0	4.0	1.57	17.0 x 17.0 x 1.0	2
0565007	12.0	4.0	1.57	17.0 x 17.0 x 1.0	2
0565008	12.7	4.0	1.57	17.0 x 17.0 x 1.0	2
0565009	14.0	4.0	1.57	17.0 x 17.0 x 1.0	2
0565010	15.9	4.0	1.57	17.0 x 17.0 x 1.0	2
0565011	16.0	4.0	1.57	17.0 x 17.0 x 1.0	2
0565012	19.1	4.0	1.57	17.0 x 17.0 x 1.0	2
0565013	22.2	4.0	1.57	17.0 x 17.0 x 1.0	2
0565014	25.4	4.0	1.57	17.0 x 17.0 x 1.0	2
0565015	28.6	4.0	1.57	17.0 x 17.0 x 1.0	2
0564020	4.8	3.18	1.57	12.5 x 12.5 x 1.0	3
0564021	6.4	3.18	1.57	12.5 x 12.5 x 1.0	3
0564022	7.9	3.18	1.57	12.5 x 12.5 x 1.0	3
0564023	9.5	3.18	1.57	12.5 x 12.5 x 1.0	3
0564024	11.1	3.18	1.57	12.5 x 12.5 x 1.0	3
0564025	12.7	3.18	1.57	12.5 x 12.5 x 1.0	3
0564026	14.3	3.18	1.57	12.5 x 12.5 x 1.0	3
0564027	15.9	3.18	1.57	12.5 x 12.5 x 1.0	3
0565020	4.8	2.54	1.63	12.5 x 12.5 x 1.0	4
0565021	6.4	2.54	1.63	12.5 x 12.5 x 1.0	4
0565022	7.9	2.54	1.63	12.5 x 12.5 x 1.0	4
0565023	9.5	2.54	1.63	12.5 x 12.5 x 1.0	4
0565024	11.1	2.54	1.63	12.5 x 12.5 x 1.0	4
0565025	12.7	2.54	1.63	12.5 x 12.5 x 1.0	4
0565026	14.3	2.54	1.63	12.5 x 12.5 x 1.0	4
0565027	15.9	2.54	1.63	12.5 x 12.5 x 1.0	4



Cupped Reverse Locking Circuit Board Supports
杯型反扣式电路板支撑柱

- Prevents the deflection of PC boards due to the weight of the mounted components
- 防止由于安装零部件的重量所导致的印刷电路板偏移

Specifications: 规格 — **RoHS ✓**

Material: Nylon 66

材料：尼龙 66

Part Number, Flammability and Colour 零件号，阻燃等级和颜色				Dimensions 尺寸					Fig. 图
					Top Hole 顶端安装孔		Bottom Hole 底部安装孔		
UL94V-2		UL94V-0		A	Hole Size 孔径	Panel Thickness 面板厚度	Hole Size 孔径	Panel Thickness 面板厚度	
Natural 本色	Black 黑色	Natural 本色	Black 黑色						
0520010	0520010-BK	0520110	0520110-BK*	4.8	4.0	1.6	6.0	0.8 - 1.2	1
0520011	0520011-BK	0520111	0520111-BK*	6.4	4.0	1.6	6.0	0.8 - 1.2	1
0520012	0520012-BK	0520112	0520112-BK*	7.9	4.0	1.6	6.0	0.8 - 1.2	1
0520013	0520013-BK	0520113	0520113-BK*	9.5	4.0	1.6	6.0	0.8 - 1.2	1
0520014	0520014-BK	0520114	0520114-BK*	12.7	4.0	1.6	6.0	0.8 - 1.2	1
0520015	0520015-BK	0520115	0520115-BK*	15.9	4.0	1.6	6.0	0.8 - 1.2	1
0520016	0520016-BK	0520116	0520116-BK*	19.1	4.0	1.6	6.0	0.8 - 1.2	1
0522010	0522010-BK*	0522110	0522110-BK*	4.8	4.0	1.6	6.0	0.8 - 1.2	2
0522011	0522011-BK*	0522111	0522111-BK*	6.4	4.0	1.6	6.0	0.8 - 1.2	2
0522012	0522012-BK*	0522112	0522112-BK*	7.9	4.0	1.6	6.0	0.8 - 1.2	2
0522013	0522013-BK*	0522113	0522113-BK*	9.5	4.0	1.6	6.0	0.8 - 1.2	2
0522014	0522014-BK*	0522114	0522114-BK*	12.7	4.0	1.6	6.0	0.8 - 1.2	2
0522015	0522015-BK*	0522115	0522115-BK*	15.9	4.0	1.6	6.0	0.8 - 1.2	2
0522016	0522016-BK*	0522116	0522116-BK*	19.1	4.0	1.6	6.0	0.8 - 1.2	2
0520020	0520020-BK*	0520120	0520120-BK*	4.8	4.0	1.6	5.4	1.2 - 2.0	3
0520021	0520021-BK*	0520121	0520121-BK*	6.4	4.0	1.6	5.4	1.2 - 2.0	3
0520022	0520022-BK*	0520122	0520122-BK*	9.5	4.0	1.6	5.4	1.2 - 2.0	3
0520023	0520023-BK*	0520123	0520123-BK*	12.7	4.0	1.6	5.4	1.2 - 2.0	3
0520024	0520024-BK*	0520124	0520124-BK*	15.9	4.0	1.6	5.4	1.2 - 2.0	3
0524021	0524021-BK	0524121	0524121-BK*	6.4	4.0	1.57	5.4	1.5 - 1.65	4
0524022	0524022-BK	0524122	0524122-BK*	9.5	4.0	1.57	5.4	1.5 - 1.65	4
0524023	0524023-BK*	0524123	0524123-BK*	12.7	4.0	1.57	5.4	1.5 - 1.65	4
0524024	0524024-BK*	0524124	0524124-BK*	15.9	4.0	1.57	5.4	1.5 - 1.65	4
0525021	0525021-BK*	0525121	0525121-BK*	6.4	4.0	1.57	6.35	1.5 - 1.65	5
0525022	0525022-BK*	0525122	0525122-BK*	9.5	4.0	1.57	6.35	1.5 - 1.65	5
0525023	0525023-BK	0525123	0525123-BK*	12.7	4.0	1.57	6.35	1.5 - 1.65	5
0525024	0525024-BK*	0525124	0525124-BK*	15.9	4.0	1.57	6.35	1.5 - 1.65	5
0520030	0520030-BK	0520130	0520130-BK*	6.4	3.18	1.57	4.75	1.5 - 1.6	6
0520031	0520031-BK	0520131	0520131-BK*	7.9	3.18	1.57	4.75	1.5 - 1.6	6
0520032	0520032-BK	0520132	0520132-BK*	9.5	3.18	1.57	4.75	1.5 - 1.6	6
0520033	0520033-BK	0520133	0520133-BK*	11.1	3.18	1.57	4.75	1.5 - 1.6	6
0520034	0520034-BK	0520134	0520134-BK*	12.7	3.18	1.57	4.75	1.5 - 1.6	6
0520035	0520035-BK	0520135	0520135-BK*	14.3	3.18	1.57	4.75	1.5 - 1.6	6
0520036	0520036-BK	0520136	0520136-BK*	15.9	3.18	1.57	4.75	1.5 - 1.6	6

* Non-stock item, could be available subject to minimum order quantity
* 非库存产品，达到最小订货量可以供货

Continued...
转下页 ...

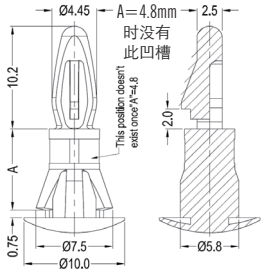

Fig.1 / 图 1

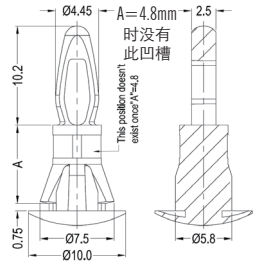

Fig.2 / 图 2

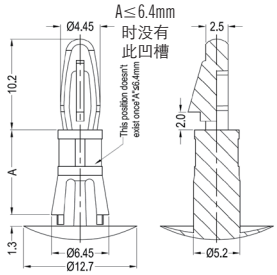

Fig.3 / 图 3

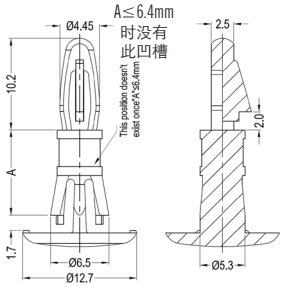

Fig.4 / 图 4

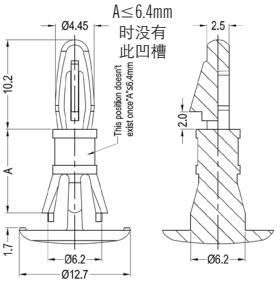

Fig.5 / 图 5

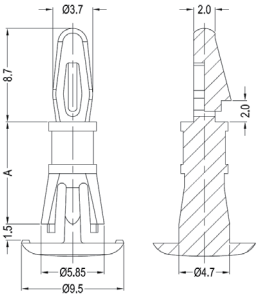

Fig.6 / 图 6

Tel: +86 512 6733 5586 or 6733 5583
Email: china@optimascomponents.com

Cupped Reverse Locking Circuit Board Supports
杯型反扣式电路板支撑柱



Specifications: RoHS ✓
规格

Material: Nylon 66

材料：尼龙 66

- Prevents the deflection of PC boards due to the weight of the mounted components
- 防止由于安装零部件的重量所导致的印刷电路板偏移

Fig.7 / 图 7

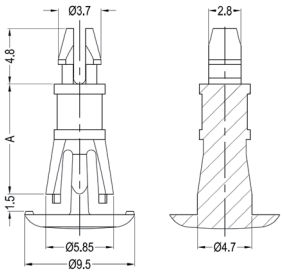

Fig.8 / 图 8

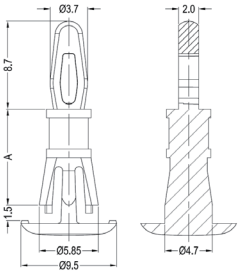

Fig.9 / 图 9

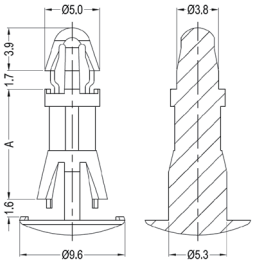

Fig.10 / 图 10

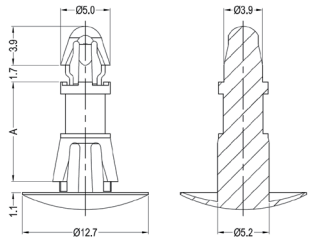

Fig.11 / 图 11

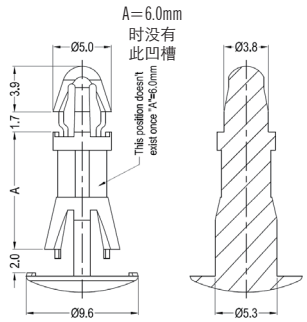

Fig.12 / 图 12

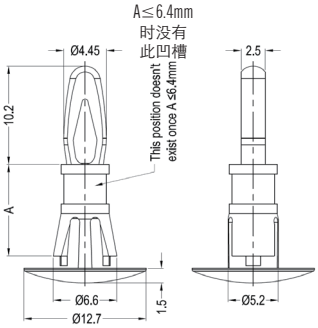

Part Number, Flammability and Colour 零件号，阻燃等级和颜色				Dimensions 尺寸					Fig. 图
				A	Top Hole 顶端安装孔		Bottom Hole 底部安装孔		
UL94V-2		UL94V-0			Hole Size 孔径	Panel Thickness 面板厚度	Hole Size 孔径	Panel Thickness 面板厚度	
Natural 本色	Black 黑色	Natural 本色	Black 黑色						
0524030	0524030-BK	0524130	0524130-BK*	6.4	3.18	1.57	4.75	1.5 - 1.6	7
0524031	0524031-BK	0524131	0524131-BK*	7.9	3.18	1.57	4.75	1.5 - 1.6	7
0524032	0524032-BK	0524132	0524132-BK*	9.5	3.18	1.57	4.75	1.5 - 1.6	7
0524033	0524033-BK	0524133	0524133-BK*	11.1	3.18	1.57	4.75	1.5 - 1.6	7
0524034	0524034-BK	0524134	0524134-BK*	12.7	3.18	1.57	4.75	1.5 - 1.6	7
0524035	0524035-BK	0524135	0524135-BK*	14.3	3.18	1.57	4.75	1.5 - 1.6	7
0524036	0524036-BK	0524136	0524136-BK*	15.9	3.18	1.57	4.75	1.5 - 1.6	7
0525030	0525030-BK*	0525130	0525130-BK*	6.4	3.18	1.57	4.75	1.5 - 1.6	8
0525031	0525031-BK*	0525131	0525131-BK*	7.9	3.18	1.57	4.75	1.5 - 1.6	8
0525032	0525032-BK*	0525132	0525132-BK*	9.5	3.18	1.57	4.75	1.5 - 1.6	8
0525033	0525033-BK*	0525133	0525133-BK*	11.1	3.18	1.57	4.75	1.5 - 1.6	8
0525034	0525034-BK*	0525134	0525134-BK*	12.7	3.18	1.57	4.75	1.5 - 1.6	8
0525035	0525035-BK*	0525135	0525135-BK*	14.3	3.18	1.57	4.75	1.5 - 1.6	8
0525036	0525036-BK*	0525136	0525136-BK*	15.9	3.18	1.57	4.75	1.5 - 1.6	8
0520040	0520040-BK	0520140	0520140-BK*	6.0	4.0	1.6	5.4	1.6	9
0520041	0520041-BK	0520141	0520141-BK*	8.0	4.0	1.6	5.4	1.6	9
0520042	0520042-BK	0520142	0520142-BK*	10.0	4.0	1.6	5.4	1.6	9
0520043	0520043-BK	0520143	0520143-BK*	12.0	4.0	1.6	5.4	1.6	9
0520044	0520044-BK	0520144	0520144-BK*	14.0	4.0	1.6	5.4	1.6	9
0524041	0524041-BK*	0524141	0524141-BK*	8.0	4.0	1.6	5.4	1.0 - 1.6	10
0524042	0524042-BK*	0524142	0524142-BK*	10.0	4.0	1.6	5.4	1.0 - 1.6	10
0524043	0524043-BK*	0524143	0524143-BK*	12.0	4.0	1.6	5.4	1.0 - 1.6	10
0524044	0524044-BK*	0524144	0524144-BK*	14.0	4.0	1.6	5.4	1.0 - 1.6	10
0525040	0525040-BK*	0525140	0525140-BK*	6.0	4.0	1.6	5.4	2.0	11
0525041	0525041-BK*	0525141	0525141-BK*	8.0	4.0	1.6	5.4	2.0	11
0525042	0525042-BK*	0525142	0525142-BK*	10.0	4.0	1.6	5.4	2.0	11
0525043	0525043-BK*	0525143	0525143-BK*	12.0	4.0	1.6	5.4	2.0	11
0525044	0525044-BK*	0525144	0525144-BK*	14.0	4.0	1.6	5.4	2.0	11
0525050	0525050-BK*	0525150	0525150-BK*	4.8	4.0	1.6	5.4	1.2 - 2.0	12
0525051	0525051-BK*	0525151	0525151-BK*	6.4	4.0	1.6	5.4	1.2 - 2.0	12
0525052	0525052-BK*	0525152	0525152-BK*	9.5	4.0	1.6	5.4	1.2 - 2.0	12
0525053	0525053-BK*	0525153	0525153-BK*	12.7	4.0	1.6	5.4	1.2 - 2.0	12
0525054	0525054-BK*	0525154	0525154-BK*	15.9	4.0	1.6	5.4	1.2 - 2.0	12

* Non-stock item, could be available subject to minimum order quantity
* 非库存产品，达到最小订货量可以供货



Male Threaded Locking Supports - Type I
I 型外螺纹电路板支撑柱

- Threaded male end can be secured by a nut
- 外螺纹端可以通过螺母固定

Specifications: **RoHS ✓**
规格

Material: Nylon 66　　材料：尼龙 66

Part Number, Flammability and Colour 零件号，阻燃等级和颜色				Thread M 螺纹尺寸	A	Top Hole Size 顶端孔径	Panel Thickness 面板厚度	Fig. 图
UL94V-2		UL94V-0						
Natural 本色	Black 黑色	Natural 本色	Black 黑色					
0620025	0620025-BK	0620125	0620125-BK	M4	6.4	4.0	1.57	1
0620026	0620026-BK	0620126	0620126-BK	M4	9.5	4.0	1.57	1
0620027	0620027-BK	0620127	0620127-BK	M4	12.7	4.0	1.57	1
0620028	0620028-BK	0620128	0620128-BK	M4	15.9	4.0	1.57	1
0620029	0620029-BK	0620129	0620129-BK	M4	19.1	4.0	1.57	1
0620030	0620030-BK	0620130	0620130-BK	M4	20.0	4.0	1.57	1
0620031	0620031-BK	0620131	0620131-BK	M4	22.2	4.0	1.57	1
0620032	0620032-BK	0620132	0620132-BK	M4	25.4	4.0	1.57	1
0620033	0620033-BK	0620133	0620133-BK	M4	28.6	4.0	1.57	1
0620034	0620034-BK	0620134	0620134-BK	M4	35.7	4.0	1.57	1
0621025	0621025-BK	0621125	0621125-BK	#8-32	6.4	4.0	1.57	1
0621026	0621026-BK	0621126	0621126-BK	#8-32	9.5	4.0	1.57	1
0621027	0621027-BK	0621127	0621127-BK	#8-32	12.7	4.0	1.57	1
0621028	0621028-BK	0621128	0621128-BK	#8-32	15.9	4.0	1.57	1
0621029	0621029-BK	0621129	0621129-BK	#8-32	19.1	4.0	1.57	1
0621030	0621030-BK	0621130	0621130-BK	#8-32	20.0	4.0	1.57	1
0621031	0621031-BK	0621131	0621131-BK	#8-32	22.2	4.0	1.57	1
0621032	0621032-BK	0621132	0621132-BK	#8-32	25.4	4.0	1.57	1
0621033	0621033-BK	0621133	0621133-BK	#8-32	28.6	4.0	1.57	1
0621034	0621034-BK	0621134	0621134-BK	#8-32	35.7	4.0	1.57	1

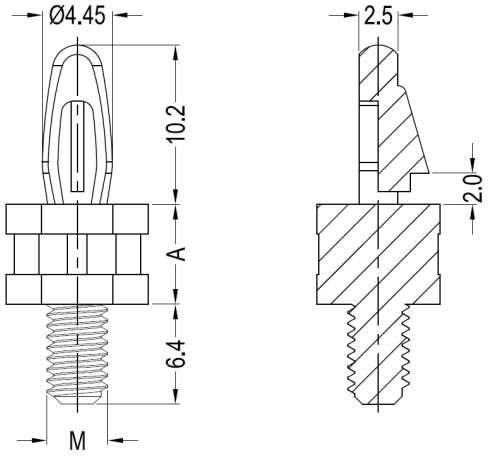

Fig.1 / 图 1

Continued...
转下页 ...

Tel: +86 512 6733 5586 or 6733 5583
Email: china@optimascomponents.com

Male Threaded Locking Supports - Type I
I 型外螺纹电路板支撑柱



Specifications: RoHS ✓
规格

Material: Nylon 66

材料：尼龙 66

- Threaded male end can be secured by a nut
- 外螺纹端可以通过螺母固定

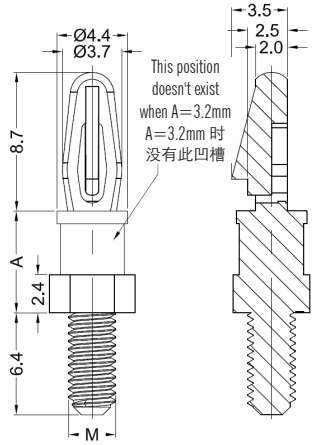

Fig.2 / 图 2

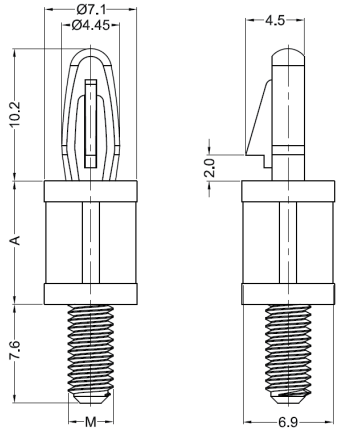

Fig.3 / 图 3

Part Number, Flammability and Colour 零件号，阻燃等级和颜色				Thread M 螺纹尺寸	A	Top Hole Size 顶端孔径	Panel Thickness 面板厚度	Fig. 图
UL94V-2		UL94V-0						
Natural 本色	Black 黑色	Natural 本色	Black 黑色					
0620010	0620010-BK	0620110	0620110-BK	M3	3.2	3.18	1.57	2
0620011	0620011-BK	0620111	0620111-BK	M3	4.8	3.18	1.57	2
0620012	0620012-BK	0620112	0620112-BK	M3	6.4	3.18	1.57	2
0620013	0620013-BK	0620113	0620113-BK	M3	7.9	3.18	1.57	2
0620014	0620014-BK	0620114	0620114-BK	M3	9.5	3.18	1.57	2
0620015	0620015-BK	0620115	0620115-BK	M3	11.1	3.18	1.57	2
0620016	0620016-BK	0620116	0620116-BK	M3	12.7	3.18	1.57	2
0620017	0620017-BK	0620117	0620117-BK	M3	14.3	3.18	1.57	2
0620018	0620018-BK	0620118	0620118-BK	M3	15.9	3.18	1.57	2
0621010	0621010-BK	0621110	0621110-BK	M4	3.2	3.18	1.57	2
0621011	0621011-BK	0621111	0621111-BK	M4	4.8	3.18	1.57	2
0621012	0621012-BK	0621112	0621112-BK	M4	6.4	3.18	1.57	2
0621013	0621013-BK	0621113	0621113-BK	M4	7.9	3.18	1.57	2
0621014	0621014-BK	0621114	0621114-BK	M4	9.5	3.18	1.57	2
0621015	0621015-BK	0621115	0621115-BK	M4	11.1	3.18	1.57	2
0621016	0621016-BK	0621116	0621116-BK	M4	12.7	3.18	1.57	2
0621017	0621017-BK	0621117	0621117-BK	M4	14.3	3.18	1.57	2
0621018	0621018-BK	0621118	0621118-BK	M4	15.9	3.18	1.57	2
0622010	0622010-BK	0622110	0622110-BK	#6-32	3.2	3.18	1.57	2
0622011	0622011-BK	0622111	0622111-BK	#6-32	4.8	3.18	1.57	2
0622012	0622012-BK	0622112	0622112-BK	#6-32	6.4	3.18	1.57	2
0622013	0622013-BK	0622113	0622113-BK	#6-32	7.9	3.18	1.57	2
0622014	0622014-BK	0622114	0622114-BK	#6-32	9.5	3.18	1.57	2
0622015	0622015-BK	0622115	0622115-BK	#6-32	11.1	3.18	1.57	2
0622016	0622016-BK	0622116	0622116-BK	#6-32	12.7	3.18	1.57	2
0622017	0622017-BK	0622117	0622117-BK	#6-32	14.3	3.18	1.57	2
0622018	0622018-BK	0622118	0622118-BK	#6-32	15.9	3.18	1.57	2
0622040	0622040-BK	0622140	0622140-BK	#6-32	6.4	3.18	1.57	3
0622041	0622041-BK	0622141	0622141-BK	#6-32	9.5	3.18	1.57	3
0622042	0622042-BK	0622142	0622142-BK	#6-32	12.7	3.18	1.57	3
0622043	0622043-BK	0622143	0622143-BK	#6-32	15.9	3.18	1.57	3
0622044	0622044-BK	0622144	0622144-BK	#6-32	19.1	3.18	1.57	3
0622045	0622045-BK	0622145	0622145-BK	#6-32	22.2	3.18	1.57	3
0622046	0622046-BK	0622146	0622146-BK	#6-32	25.4	3.18	1.57	3
0621040	0621040-BK	0621140	0621140-BK	M4	6.4	4.0	1.57	3
0621041	0621041-BK	0621141	0621141-BK	M4	9.5	4.0	1.57	3
0621042	0621042-BK	0621142	0621142-BK	M4	12.7	4.0	1.57	3
0621043	0621043-BK	0621143	0621143-BK	M4	15.9	4.0	1.57	3
0621044	0621044-BK	0621144	0621144-BK	M4	19.1	4.0	1.57	3
0621045	0621045-BK	0621145	0621145-BK	M4	22.2	4.0	1.57	3
0621046	0621046-BK	0621146	0621146-BK	M4	25.4	4.0	1.57	3



Male Threaded Locking Supports - Type II
II 型外螺纹电路板支撑柱

- Threaded male end can be secured by a nut
- 外螺纹端可以通过螺母固定

Specifications: 规格 — **RoHS ✓**

Material: Nylon 66 — 材料：尼龙 66

Part Number, Flammability and Colour 零件号，阻燃等级和颜色				Thread M 螺纹尺寸	A	B	L	Top Hole Size D 顶端孔径	Panel Thickness 面板厚度
UL94V-2		UL94V-0							
Natural 本色	Black 黑色	Natural 本色	Black 黑色						
0625070	0625070-BK	0625170	0625170-BK	M2.5	3.0	3.6	6.0	3.0	1.6
0625071	0625071-BK	0625171	0625171-BK	M2.5	5.0	3.6	6.0	3.0	1.6
0625072	0625072-BK	0625172	0625172-BK	M2.5	6.0	3.6	6.0	3.0	1.6
0625073	0625073-BK	0625173	0625173-BK	M2.5	8.0	3.6	6.0	3.0	1.6
0625074	0625074-BK	0625174	0625174-BK	M2.5	10.0	3.6	6.0	3.0	1.6
0625075	0625075-BK	0625175	0625175-BK	M2.5	12.0	3.6	6.0	3.0	1.6
0625076	0625076-BK	0625176	0625176-BK	M2.5	15.0	3.6	6.0	3.0	1.6
0625077	0625077-BK	0625177	0625177-BK	M2.5	20.0	3.6	6.0	3.0	1.6
0620070	0620070-BK	0620170	0620170-BK	M3	3.0	3.6	6.0	3.0	1.6
0620071	0620071-BK	0620171	0620171-BK	M3	5.0	3.6	6.0	3.0	1.6
0620072	0620072-BK	0620172	0620172-BK	M3	6.0	3.6	6.0	3.0	1.6
0620073	0620073-BK	0620173	0620173-BK	M3	8.0	3.6	6.0	3.0	1.6
0620074	0620074-BK	0620174	0620174-BK	M3	10.0	3.6	6.0	3.0	1.6
0620075	0620075-BK	0620175	0620175-BK	M3	12.0	3.6	6.0	3.0	1.6
0620076	0620076-BK	0620176	0620176-BK	M3	15.0	3.6	6.0	3.0	1.6
0620077	0620077-BK	0620177	0620177-BK	M3	20.0	3.6	6.0	3.0	1.6
0621070	0621070-BK	0621170	0621170-BK	M4	3.0	4.8	6.4	3.0	1.6
0621071	0621071-BK	0621171	0621171-BK	M4	5.0	4.8	6.4	3.0	1.6
0621072	0621072-BK	0621172	0621172-BK	M4	6.0	4.8	6.4	3.0	1.6
0621073	0621073-BK	0621173	0621173-BK	M4	8.0	4.8	6.4	3.0	1.6
0621074	0621074-BK	0621174	0621174-BK	M4	10.0	4.8	6.4	3.0	1.6
0621075	0621075-BK	0621175	0621175-BK	M4	12.0	4.8	6.4	3.0	1.6
0621076	0621076-BK	0621176	0621176-BK	M4	15.0	4.8	6.4	3.0	1.6
0621077	0621077-BK	0621177	0621177-BK	M4	20.0	4.8	6.4	3.0	1.6

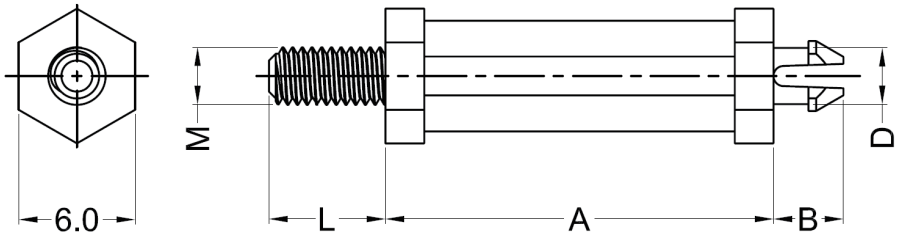

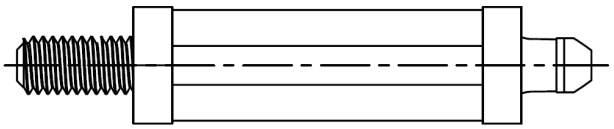

Tel: +86 512 6733 5586 or 6733 5583
Email: china@optimascomponents.com

Hex Mini Support Posts - Male Threaded
外螺纹六角微型支撑柱



Specifications:
规格

RoHS ✓

Material: Nylon 66
Colour: Natural

材料：尼龙 66
颜色：本色

- Threaded male end can be secured by a nut
- The top end has a low profile

- 外螺纹端可以通过螺母固定
- 顶端卡扣高度较低

Part Number and Flammability 零件号和阻燃等级		Thread M 螺纹尺寸	A	Top Hole Size 顶端孔径	Panel Thickness 面板厚度
UL94V-2	UL94V-0				
0622080	0622180	#6-32	3.2	3.86	1.57
0622081	0622181	#6-32	4.8	3.86	1.57
0622082	0622182	#6-32	6.4	3.86	1.57
0622083	0622183	#6-32	9.5	3.86	1.57
0622084	0622184	#6-32	12.7	3.86	1.57
0622085	0622185	#6-32	15.9	3.86	1.57
0622086	0622186	#6-32	19.1	3.86	1.57
0622087	0622187	#6-32	22.2	3.86	1.57
0620080	0620180	M3	3.2	3.86	1.57
0620081	0620181	M3	4.8	3.86	1.57
0620082	0620182	M3	6.4	3.86	1.57
0620083	0620183	M3	9.5	3.86	1.57
0620084	0620184	M3	12.7	3.86	1.57
0620085	0620185	M3	15.9	3.86	1.57
0620086	0620186	M3	19.1	3.86	1.57
0620087	0620187	M3	22.2	3.86	1.57
0621080	0821180	M4	3.2	3.86	1.57
0621081	0821181	M4	4.8	3.86	1.57
0621082	0821182	M4	6.4	3.86	1.57
0621083	0821183	M4	9.5	3.86	1.57
0621084	0821184	M4	12.7	3.86	1.57
0621085	0821185	M4	15.9	3.86	1.57
0621086	0821186	M4	19.1	3.86	1.57
0621087	0821187	M4	22.2	3.86	1.57

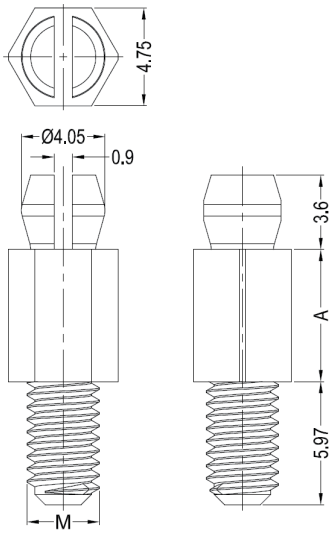



Mini Circuit Board Supports - Male Threaded
外螺纹微型电路板支撑柱

- Threaded male end can be secured by a nut
- The top end has a low profile

- 外螺纹端可以通过螺母固定
- 顶端卡扣高度较低

Specifications: 规格 — **RoHS ✓**

Material: Nylon 66 — 材料：尼龙 66

Part Number, Flammability and Colour 零件号，阻燃等级和颜色				Thread M 螺纹尺寸	A	Top Hole Size D 顶端孔径	Panel Thickness 面板厚度
UL94V-2		UL94V-0					
Natural 本色	Black 黑色	Natural 本色	Black 黑色				
0620090	0620090-BK	0620190	0620190-BK	M3	3.2	2.5	1.6
0620091	0620091-BK	0620191	0620191-BK	M3	4.8	2.5	1.6
0620092	0620092-BK	0620192	0620192-BK	M3	6.4	2.5	1.6
0620093	0620093-BK	0620193	0620193-BK	M3	7.9	2.5	1.6
0620094	0620094-BK	0620194	0620194-BK	M3	9.5	2.5	1.6
0620095	0620095-BK	0620195	0620195-BK	M3	11.1	2.5	1.6
0620096	0620096-BK	0620196	0620196-BK	M3	12.7	2.5	1.6
0620097	0620097-BK	0620197	0620197-BK	M3	14.3	2.5	1.6
0620098	0620098-BK	0620198	0620198-BK	M3	15.9	2.5	1.6
0621090	0621090-BK	0621190	0621190-BK	M4	3.2	2.5	1.6
0621091	0621091-BK	0621191	0621191-BK	M4	4.8	2.5	1.6
0621092	0621092-BK	0621192	0621192-BK	M4	6.4	2.5	1.6
0621093	0621093-BK	0621193	0621193-BK	M4	7.9	2.5	1.6
0621094	0621094-BK	0621194	0621194-BK	M4	9.5	2.5	1.6
0621095	0621095-BK	0621195	0621195-BK	M4	11.1	2.5	1.6
0621096	0621096-BK	0621196	0621196-BK	M4	12.7	2.5	1.6
0621097	0621097-BK	0621197	0621197-BK	M4	14.3	2.5	1.6
0621098	0621098-BK	0621198	0621198-BK	M4	15.9	2.5	1.6

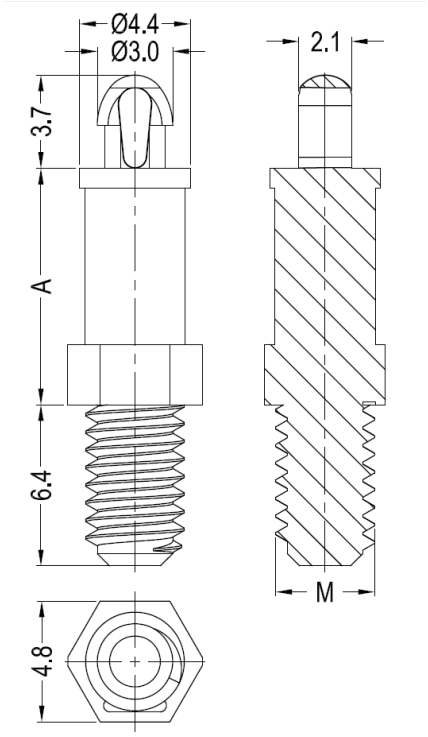

Tel: +86 512 6733 5586 or 6733 5583
Email: china@optimascomponents.com

Female Threaded Circuit Board Supports - Type I
I 型内螺纹电路板支撑柱



Specifications:
规格

RoHS ✓

Material: Nylon 66
Colour: Natural
Flammability Rating: UL94V2

材料：尼龙 66
颜色：本色
阻燃等级：UL94V2

- Internal thread to be mounted with a #6-32/M4 screw
- 内螺纹可以用 #6-32/M4 的螺钉固定

Part Number 零件号	Thread M 螺纹尺寸	A	Top Hole Size 顶端孔径	Panel Thickness 面板厚度	Fig. 图
0620050	#6-32	9.5	4.0	1.57	1
0620051	#6-32	12.7	4.0	1.57	1
0620052	#6-32	15.9	4.0	1.57	1
0620053	#6-32	19.1	4.0	1.57	1
0620054	#6-32	22.2	4.0	1.57	1
0620055	#6-32	25.4	4.0	1.57	1
0620056	M4	9.5	4.0	1.57	1
0620057	M4	12.7	4.0	1.57	1
0620058	M4	15.9	4.0	1.57	1
0620059	M4	19.1	4.0	1.57	1
0620060	M4	22.2	4.0	1.57	1
0620061	M4	25.4	4.0	1.57	1
0621050	#6-32	9.5	4.0	1.57	2
0621051	#6-32	12.7	4.0	1.57	2
0621052	#6-32	15.9	4.0	1.57	2
0621053	#6-32	19.1	4.0	1.57	2
0621054	#6-32	22.2	4.0	1.57	2
0621055	#6-32	25.4	4.0	1.57	2
0621056	M4	9.5	4.0	1.57	2
0621057	M4	12.7	4.0	1.57	2
0621058	M4	15.9	4.0	1.57	2
0621059	M4	19.1	4.0	1.57	2
0621060	M4	22.2	4.0	1.57	2
0621061	M4	25.4	4.0	1.57	2

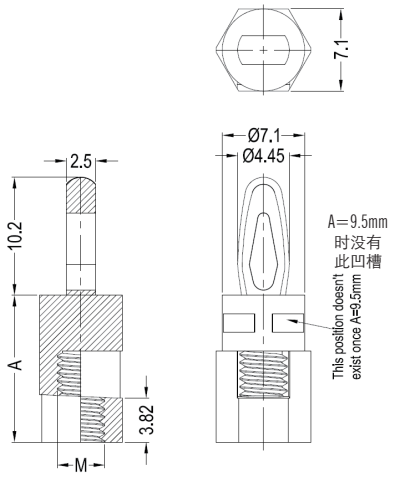

Fig.1 / 图 1

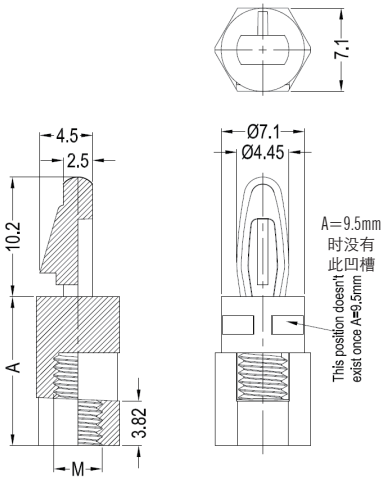

Fig.2 / 图 2



Female Threaded Circuit Board Supports - Type II
II 型内螺纹电路板支撑柱

- Internal thread to be mounted with a M3/M4 screw
- 内螺纹可以用 M3/M4 的螺钉固定

Specifications: RoHS ✓
规格

Material: Nylon 66
Colour: Black
Flammability Rating: UL94V2
材料：尼龙 66
颜色：黑色
阻燃等级：UL94V2

Part Number 零件号	Thread M 螺纹尺寸	B	C	L	T	Top Hole Size 顶端孔径	Panel Thickness 面板厚度
0620705	M3	3.0	6.0	5.0	1.7	4.0	1.5 - 1.6
0620706	M3	4.0	6.0	6.0	1.7	4.0	1.5 - 1.6
0620707	M3	4.0	6.0	7.0	1.7	4.0	1.5 - 1.6
0620708	M3	6.0	8.0	8.0	1.7	4.0	1.5 - 1.6
0620709	M3	6.0	6.0	9.0	1.7	4.0	1.5 - 1.6
0620710	M3	8.0	6.0	10.0	1.7	4.0	1.5 - 1.6
0620712	M3	10.0	6.0	12.0	1.7	4.0	1.5 - 1.6
0620715	M3	7.6	6.0	15.0	1.7	4.0	1.5 - 1.6
0620718	M3	10.0	6.0	18.0	1.7	4.0	1.5 - 1.6
0620723	M3	10.0	8.0	23.0	1.7	4.0	1.5 - 1.6
0620730	M3	10.0	6.0	30.0	1.7	4.0	1.5 - 1.6
0620740	M3	10.0	6.0	40.0	1.7	4.0	1.5 - 1.6
0620745	M3	10.0	6.0	45.0	1.7	4.0	1.5 - 1.6
0620820	M3	10.0	6.0	20.0	1.8	4.0	1.6 - 1.7
0620822	M3	10.0	6.0	22.0	1.8	4.0	1.6 - 1.7
0620825	M3	10.0	6.0	25.0	1.8	4.0	1.6 - 1.7
0620906	M3	4.0	6.0	6.0	2.2	4.0	2.0 - 2.1
0620908	M3	6.0	6.0	8.0	2.2	4.0	2.0 - 2.1
0620910	M3	8.0	6.0	10.0	2.2	4.0	2.0 - 2.1
0620912	M3	10.0	8.0	12.0	2.2	4.0	2.0 - 2.1
0620925	M3	10.0	6.0	25.0	2.2	4.0	2.0 - 2.1
0620950	M3	10.0	6.0	50.0	2.2	4.0	2.0 - 2.1
0621705	M4	4.0	8.0	5.0	1.7	4.0	1.5 - 1.6
0621706	M4	4.0	8.0	6.0	1.7	4.0	1.5 - 1.6
0621707	M4	4.0	8.0	7.0	1.7	4.0	1.5 - 1.6
0621708	M4	6.0	8.0	8.0	1.7	4.0	1.5 - 1.6
0621709	M4	7.0	8.0	9.0	1.7	4.0	1.5 - 1.6
0621710	M4	8.0	8.0	10.0	1.7	4.0	1.5 - 1.6
0621715	M4	8.0	8.0	15.0	1.7	4.0	1.5 - 1.6
0621718	M4	10.0	8.0	18.0	1.7	4.0	1.5 - 1.6
0621720	M4	10.0	8.0	20.0	1.7	4.0	1.5 - 1.6
0621725	M4	10.0	8.0	25.0	1.7	4.0	1.5 - 1.6
0621730	M4	10.0	8.0	30.0	1.7	4.0	1.5 - 1.6
0621740	M4	10.0	8.0	40.0	1.7	4.0	1.5 - 1.6
0621745	M4	10.0	8.0	45.0	1.7	4.0	1.5 - 1.6
0621750	M4	10.0	8.0	50.0	1.7	4.0	1.5 - 1.6
0621760	M4	10.0	8.0	60.0	1.7	4.0	1.5 - 1.6
0621770	M4	12.6	8.0	70.0	1.7	4.0	1.5 - 1.6
0621812	M4	10.0	8.0	12.0	1.8	4.0	1.6 - 1.7
0621813	M4	10.0	8.0	13.0	1.8	4.0	1.6 - 1.7
0621823	M4	10.0	8.0	23.0	1.8	4.0	1.6 - 1.7
0621830	M4	10.0	8.0	30.0	1.8	4.0	1.6 - 1.7
0621906	M4	4.0	8.0	6.0	2.2	4.0	2.0 - 2.1
0621907	M4	4.0	8.0	7.0	2.2	4.0	2.0 - 2.1
0621908	M4	6.0	8.0	8.0	2.2	4.0	2.0 - 2.1
0621909	M4	7.0	8.0	9.0	2.2	4.0	2.0 - 2.1
0621910	M4	8.0	8.0	10.0	2.2	4.0	2.0 - 2.1
0621912	M4	10.0	8.0	12.0	2.2	4.0	2.0 - 2.1
0621914	M4	10.0	8.0	14.0	2.2	4.0	2.0 - 2.1
0621918	M4	10.0	8.0	18.0	2.2	4.0	2.0 - 2.1
0621925	M4	10.0	8.0	25.0	2.2	4.0	2.0 - 2.1
0621930	M4	10.0	8.0	30.0	2.2	4.0	2.0 - 2.1
0621935	M4	10.0	8.0	35.0	2.2	4.0	2.0 - 2.1
0621945	M4	10.0	8.0	45.0	2.2	4.0	2.0 - 2.1
0621950	M4	10.0	8.0	50.0	2.2	4.0	2.0 - 2.1

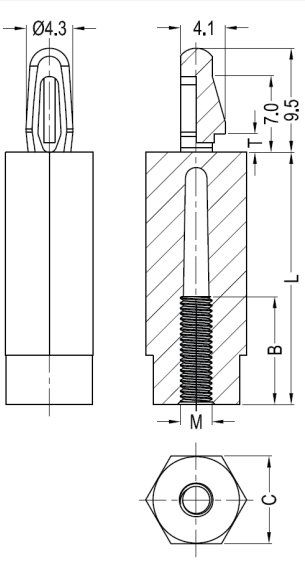

Tel: +86 512 6733 5586 or 6733 5583
Email: china@optimascomponents.com

Male - Female Hex Threaded Standoffs
外螺纹 - 内螺纹六边形间隔柱



Specifications: RoHS ✓
规格

Material: Nylon 66
Flammability Rating: UL94V2

材料：尼龙 66
阻燃等级：UL94V2

- Internal thread on one end and male thread on the other
- 一端是内螺纹，另一端是外螺纹

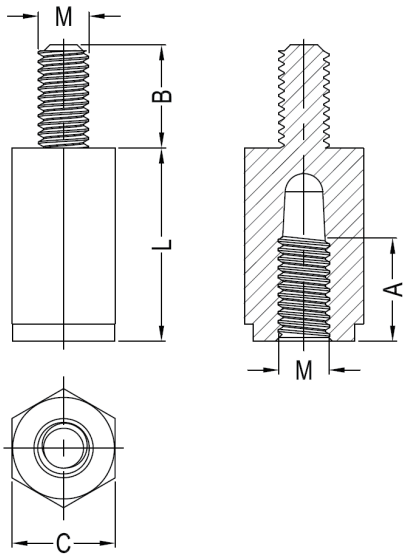

Part Number and Colour 零件号和颜色		Thread M 螺纹尺寸	A	B	C	L
Black 黑色	Natural 本色					
0590001-BK	0590001	M2.5	3.0	8.0	5.0	5.0
0590002-BK	0590002	M2.5	6.0	8.0	5.0	8.0
0590003-BK	0590003	M2.5	8.0	8.0	5.0	10.0
0590004-BK	0590004	M2.5	3.0	8.0	5.5	5.0
0590005-BK	0590005	M2.5	6.0	8.0	5.5	8.0
0590006-BK	0590006	M2.5	8.0	8.0	5.5	10.0
0590007-BK	0590007	M2.5	8.0	8.0	5.5	12.0
0590008-BK	0590008	M2.5	8.0	8.0	5.5	15.0
0590009-BK	0590009	M2.5	8.0	8.0	5.5	20.0
0590010-BK	0590010	M2.5	8.0	8.0	5.5	25.0
0590011-BK	0590011	M2.5	8.0	8.0	5.5	35.0
0591001-BK	0591001	M3	3.0	8.0	6.0	5.0
0591002-BK	0591002	M3	4.0	8.0	6.0	6.0
0591003-BK	0591003	M3	6.0	8.0	6.0	8.0
0591004-BK	0591004	M3	6.0	6.3	6.0	8.0
0591005-BK	0591005	M3	8.0	8.0	6.0	10.0
0591006-BK	0591006	M3	10.0	8.0	6.0	12.0
0591007-BK	0591007	M3	10.0	8.0	6.0	13.0
0591008-BK	0591008	M3	10.0	8.0	6.0	15.0
0591009-BK	0591009	M3	10.0	8.0	6.0	16.0
0591010-BK	0591010	M3	10.0	8.0	6.0	18.0
0591011-BK	0591011	M3	10.0	8.0	6.0	20.0
0591012-BK	0591012	M3	10.0	8.0	6.0	22.0
0591013-BK	0591013	M3	10.0	8.0	6.0	25.0
0591014-BK	0591014	M3	10.0	8.0	6.0	27.0
0591015-BK	0591015	M3	10.0	8.0	6.0	30.0
0591016-BK	0591016	M3	10.0	8.0	6.0	35.0
0591017-BK	0591017	M3	10.0	8.0	6.0	40.0
0591018-BK	0591018	M3	6.0	8.0	8.0	8.0
0591019-BK	0591019	M3	8.0	8.0	8.0	10.0
0591020-BK	0591020	M3	8.0	8.0	8.0	20.0
0591021-BK	0591021	M3	8.0	8.0	8.0	35.0
0592001-BK	0592001	M4	8.0	6.0	7.0	45.0
0592002-BK	0592002	M4	3.0	8.0	8.0	5.0
0592003-BK	0592003	M4	5.5	8.0	8.0	7.0
0592004-BK	0592004	M4	6.0	8.0	8.0	8.0
0592005-BK	0592005	M4	8.0	8.0	8.0	10.0
0592006-BK	0592006	M4	8.0	8.0	8.0	12.0
0592007-BK	0592007	M4	8.0	8.0	8.0	13.0
0592008-BK	0592008	M4	8.0	8.0	8.0	15.0
0592009-BK	0592009	M4	8.0	8.0	8.0	18.0
0592010-BK	0592010	M4	10.0	8.0	8.0	20.0
0592011-BK	0592011	M4	10.0	8.0	8.0	25.0
0592012-BK	0592012	M4	10.0	8.0	8.0	30.0
0592013-BK	0592013	M4	10.0	8.0	8.0	32.0
0592014-BK	0592014	M4	10.0	8.0	8.0	34.0
0592015-BK	0592015	M4	10.0	8.0	8.0	35.0
0592016-BK	0592016	M4	10.0	8.0	8.0	36.0
0592017-BK	0592017	M4	10.0	8.0	8.0	40.0
0592018-BK	0592018	M4	10.0	8.0	8.0	42.0
0592019-BK	0592019	M4	10.0	8.0	8.0	45.0
0592020-BK	0592020	M4	10.0	8.0	8.0	55.0
0593001-BK	0593001	M5	8.0	8.0	10.0	10.0
0593002-BK	0593002	M5	10.0	8.0	10.0	16.0
0593003-BK	0593003	M5	10.0	8.0	10.0	25.0
0593004-BK	0593004	M5	10.0	8.0	10.0	30.0
0593005-BK	0593005	M5	10.0	8.0	10.0	35.0
0593006-BK	0593006	M5	10.0	10.5	10.0	40.0
0593007-BK	0593007	M5	10.0	8.0	10.0	50.0



Male - Male Hex Threaded Standoffs
外螺纹 - 外螺纹六边形间隔柱

- Male thread on each end
- 两端都是外螺纹

Specifications: 规格 — RoHS ✓

Material: Nylon 66
Colour: Black

材料：尼龙 66
颜色：黑色

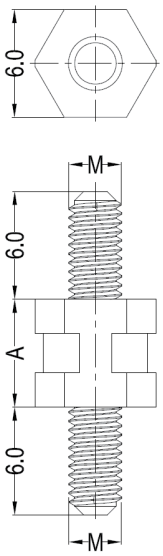

Part Number and Flammability 零件号和阻燃等级		Thread M 螺纹尺寸	A
UL94HB	UL94V-2		
0591925-BK	0591025-BK	M3	5.0
0591926-BK	0591026-BK	M3	6.0
0591928-BK	0591028-BK	M3	25.0
0591929-BK	0591029-BK*	M3	35.0
0592927-BK	0592027-BK*	M4	12.0
0592928-BK	0592028-BK*	M4	25.0
0592930-BK	0592030-BK*	M4	40.0

* Non-stock item, could be available subject to minimum order quantity
* 非库存产品，达到最小订货量可以供货



Circuit Board Stacking Spacers
电路板叠加间隔柱

- To stack circuits one on another
- 可以将一个电路板堆叠在另一个上面

Specifications: 规格 — RoHS ✓

Material: Nylon 66

材料：尼龙 66

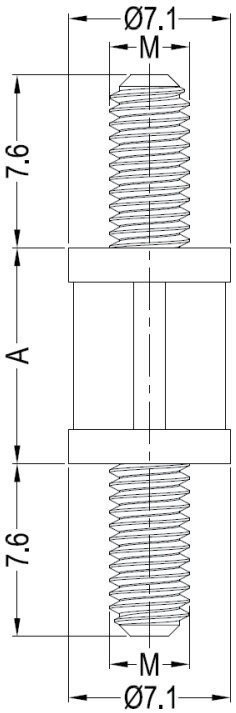

Part Number, Flammability and Colour 零件号，阻燃等级和颜色				Thread M 螺纹尺寸	A
UL94V-2		UL94V-0			
Natural 本色	Black 黑色	Natural 本色	Black 黑色		
0594035	0594035-BK	0594135	0594135-BK	#6-32	6.4
0594036	0594036-BK	0594136	0594136-BK	#6-32	9.5
0594037	0594037-BK	0594137	0594137-BK	#6-32	12.7
0594038	0594038-BK	0594138	0594138-BK	#6-32	15.9
0594039	0594039-BK	0594139	0594139-BK	#6-32	19.1
0594040	0594040-BK	0594140	0594140-BK	#6-32	22.2
0594041	0594041-BK	0594141	0594141-BK	#6-32	25.4
0592035	0592035-BK	0592135	0592135-BK	M4	6.4
0592036	0592036-BK	0592136	0592136-BK	M4	9.5
0592037	0592037-BK	0592137	0592137-BK	M4	12.7
0592038	0592038-BK	0592138	0592138-BK	M4	15.9
0592039	0592039-BK	0592139	0592139-BK	M4	19.1
0592040	0592040-BK	0592140	0592140-BK	M4	22.2
0592041	0592041-BK	0592141	0592141-BK	M4	25.4

Tel: +86 512 6733 5586 or 6733 5583
Email: china@optimascomponents.com

Female - Female Hex Threaded Spacers
内螺纹 - 内螺纹六边形间隔柱



Specifications: RoHS ✓
规格

Material: Nylon 6 + GF
Colour: Black
Flammability Rating: UL94HB

材料：尼龙 6 加玻纤
颜色：黑色
阻燃等级：UL94HB

- Fully threaded or partially threaded on each end
- 全螺纹或者两端半螺纹

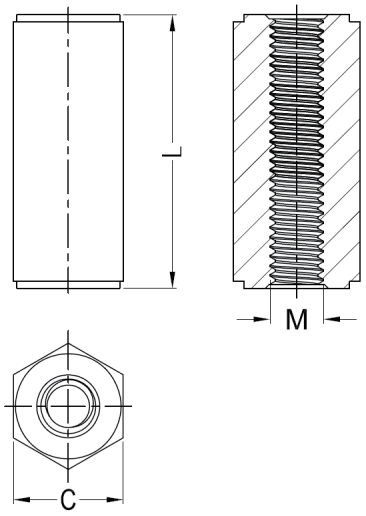

Fig.1 / 图 1

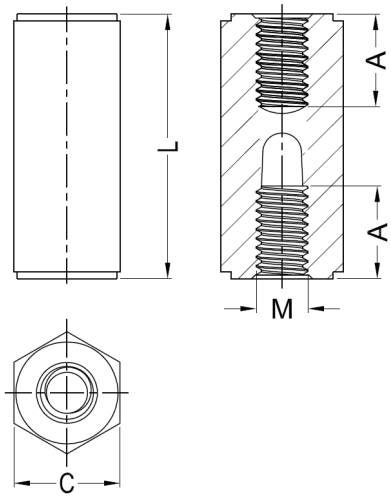

Fig.2 / 图 2

Part Number 零件号	Thread M 螺纹尺寸	A	C	L	Fig. 图
0131101	M2	-	5.0	5.0	1
0131102	M2	-	5.0	8.0	1
0131103	M2	-	5.0	10.0	1
0131104	M2	-	5.0	12.0	1
0131105	M2	-	5.0	13.0	1
0131106	M2	-	5.0	15.0	1
0131202	M2.5	-	5.0	8.0	1
0131203	M2.5	-	5.0	10.0	1
0131204	M2.5	-	5.0	12.0	1
0131205	M2.5	-	5.0	14.0	1
0131206	M2.5	-	5.0	15.0	1
0131207	M2.5	-	5.0	18.0	1
0131208	M2.5	-	5.0	20.0	1
0131209	M2.5	10.0	5.0	25.0	2
0131210	M2.5	10.0	5.0	28.0	2
0131211	M2.5	10.0	5.0	30.0	2
0131301	M3	-	5.5	5.0	1
0131302	M3	-	5.5	8.0	1
0131303	M3	-	5.5	10.0	1
0131304	M3	-	5.5	12.0	1
0131305	M3	-	5.5	15.0	1
0131306	M3	-	5.5	18.0	1
0131307	M3	-	5.5	20.0	1
0131308	M3	10.0	5.5	25.0	2
0131309	M3	10.0	5.5	30.0	2
0131310	M3	10.0	5.5	35.0	2
0131311	M3	-	6.0	5.0	1
0131312	M3	-	6.0	6.0	1
0131313	M3	-	6.0	7.0	1
0131314	M3	-	6.0	8.0	1
0131315	M3	-	6.0	10.0	1
0131316	M3	-	6.0	11.0	1
0131317	M3	-	6.0	12.0	1
0131318	M3	-	6.0	15.0	1
0131319	M3	-	6.0	18.0	1
0131320	M3	-	6.0	20.0	1

Continued...
转下页 ...



Female - Female Hex Threaded Spacers
内螺纹 - 内螺纹六边形间隔柱

- Fully threaded or partially threaded on each end
- 全螺纹或者两端半螺纹

Specifications: 规格 — **RoHS ✓**

Material: Nylon 6 + GF
Colour: Black
Flammability Rating: UL94HB

材料：尼龙 6 加玻纤
颜色：黑色
阻燃等级：UL94HB

Part Number 零件号	Thread M 螺纹尺寸	A	C	L	Fig. 图
0132321	M3	8.0	6.0	17.0	2
0132322	M3	10.0	6.0	24.0	2
0132323	M3	10.0	6.0	25.0	2
0132324	M3	10.0	6.0	27.0	2
0132325	M3	10.0	6.0	28.0	2
0132326	M3	10.0	6.0	30.0	2
0132327	M3	10.0	6.0	35.0	2
0132329	M3	10.0	6.0	40.0	2
0132330	M3	10.0	6.0	50.0	2
0131331	M3	-	7.0	12.0	1
0131332	M3	-	7.0	20.0	1
0131333	M3	-	8.0	12.0	1
0131334	M3	-	8.0	20.0	1
0131402	M4	-	8.0	8.0	1
0131403	M4	-	8.0	10.0	1
0131404	M4	-	8.0	12.0	1
0131405	M4	-	8.0	15.0	1
0131406	M4	-	8.0	16.0	1
0131407	M4	-	8.0	18.0	1
0131408	M4	-	8.0	20.0	1
0132409	M4	10.0	8.0	25.0	2
0132410	M4	10.0	8.0	30.0	2
0132411	M4	10.0	8.0	32.0	2
0132412	M4	10.0	8.0	35.0	2
0132413	M4	10.0	8.0	40.0	2
0132414	M4	10.0	8.0	60.0	2
0132415	M4	10.0	10.0	35.0	2
0131503	M5	-	10.0	10.0	1
0131504	M5	-	10.0	20.0	1
0132505	M5	10.0	10.0	25.0	2
0132506	M5	10.0	10.0	30.0	2
0131603	M6	-	10.0	10.0	1
0131604	M6	-	10.0	12.0	1
0131605	M6	-	10.0	15.0	1
0131606	M6	-	10.0	20.0	1
0132607	M6	10.0	10.0	25.0	2
0132608	M6	10.0	10.0	30.0	2

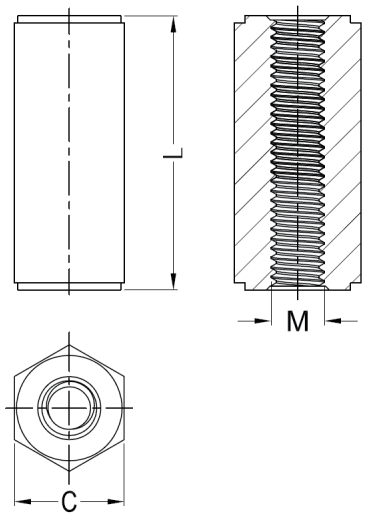

Fig.1 / 图 1

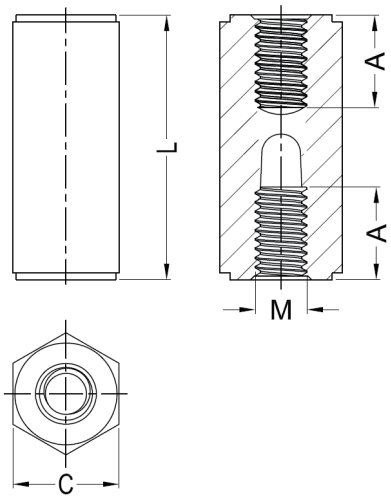

Fig.2 / 图 2

Tel: +86 512 6733 5586 or 6733 5583
Email: china@optimascomponents.com

Female - Female Round Threaded Spacers
内螺纹 - 内螺纹圆柱形间隔柱



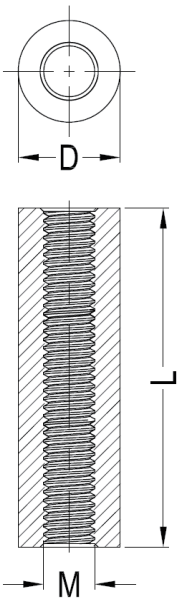

Fig.1 / 图 1

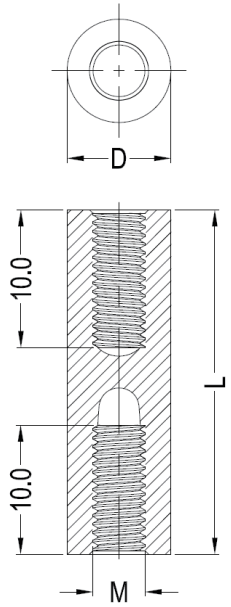

Fig.2 / 图 2

Specifications: **RoHS ✓**
规格

Material: Nylon 6 + GF
Colour: Black
Flammability Rating: UL94HB

材料：尼龙 6 加玻纤
颜色：黑色
阻燃等级：UL94HB

- Fully threaded or partially threaded on each end
- 全螺纹或者两端半螺纹

Part Number 零件号	Thread M 螺纹尺寸	D	L	Fig. 图
0131340	M3	6.0	5.0	1
0131341	M3	6.0	8.0	1
0131342	M3	6.0	10.0	1
0131343	M3	6.0	12.0	1
0131344	M3	6.0	15.0	1
0131345	M3	6.0	18.0	1
0131346	M3	6.0	20.0	1
0132347	M3	6.0	22.0	2
0132348	M3	6.0	25.0	2
0132349	M3	6.0	30.0	2
0132350	M3	6.0	35.0	2
0132351	M3	6.0	40.0	2
0131352	M3	7.0	15.0	1
0132353	M3	7.0	40.0	2
0131442	M4	7.0	10.0	1
0131443	M4	7.0	12.0	1
0131444	M4	7.0	15.0	1
0131445	M4	7.0	20.0	1
0132446	M4	7.0	25.0	2
0132447	M4	7.0	30.0	2
0132448	M4	7.0	35.0	2
0131449	M4	8.0	5.0	1
0131450	M4	8.0	10.0	1
0131451	M4	8.0	12.0	1
0131452	M4	8.0	15.0	1
0131453	M4	8.0	20.0	1
0132454	M4	8.0	35.0	2



Metric Hex Threaded Insulators
公制六边形螺纹间隔柱

- Nylon 66 body combined with brass insert provides fully insulated and strong fixing for printed circuit boards and busbars etc
- 采用尼龙 66 柱体压入带螺纹铜嵌件确保印刷电路板和线路连接片等实现完全的绝缘并且可靠地固定

Specifications: RoHS ✓
规格

Material: Body - Nylon 66, Insert - Brass
Colour: Natural
Flammability: UL94V2

材料：柱体 - 尼龙 66, 嵌件 - 黄铜
颜色：本色
阻燃等级：UL94V2

Part Number 零件号	Thread M 螺纹尺寸	D	L	L1	L2	Fig. 图
0131262	M2.5	6.4	18.0	6.0	-	1
0131361	M3	6.4	15.0	6.0	-	1
0131362	M3	6.4	18.0	6.0	-	1
0131363	M3	6.4	20.0	6.0	-	1
0131364	M3	6.4	22.0	6.0	-	1
0131365	M3	6.4	25.0	6.0	-	1
0131366	M3	6.4	28.0	6.0	-	1
0131367	M3	6.4	30.0	6.0	-	1
0131368	M3	6.4	36.0	6.0	-	1
0131369	M3	6.4	38.0	6.0	-	1
0131370	M3	6.4	40.0	6.0	-	1
0131371	M3	6.4	41.0	6.0	-	1
0131372	M3	6.4	45.0	6.0	-	1
0131460	M4	8.0	12.0	6.0	-	1
0131461	M4	8.0	15.0	6.0	-	1
0131462	M4	8.0	20.0	6.0	-	1
0131463	M4	8.0	22.0	6.0	-	1
0131464	M4	8.0	27.0	6.0	-	1
0131465	M4	8.0	30.0	6.0	-	1
0131466	M4	8.0	36.0	6.0	-	1
0131467	M4	8.0	40.0	6.0	-	1
0131468	M4	8.0	45.0	6.0	-	1
0131469	M4	9.5	90.0	6.0	-	1
0131562	M5	9.5	19.0	8.0	-	1
0131563	M5	9.5	40.0	10.0	-	1
0131564	M5	9.5	45.0	10.0	-	1
0131565	M5	9.5	50.0	10.0	-	1
0131566	M5	9.5	58.0	10.0	-	1
0131567	M5	9.5	70.0	10.0	-	1
0131568	M5	9.5	84.0	10.0	-	1
0131569	M5	9.5	88.2	10.0	-	1
0131570	M5	9.5	90.0	10.0	-	1
0131650	M6	12.7	50.0	12.7	-	1
0131651	M6	12.7	55.0	12.7	-	1
0131652	M6	12.7	60.0	12.7	-	1
0132262	M2.5	6.4	18.0	6.0	6.5	2
0132361	M3	6.4	15.0	6.0	6.5	2
0132362	M3	6.4	18.0	6.0	6.5	2
0132363	M3	6.4	20.0	6.0	6.5	2
0132364	M3	6.4	22.0	6.0	6.5	2
0132365	M3	6.4	25.0	6.0	6.5	2
0132366	M3	6.4	28.0	6.0	6.5	2
0132367	M3	6.4	30.0	6.0	6.5	2
0132368	M3	6.4	36.0	6.0	6.5	2
0132369	M3	6.4	38.0	6.0	6.5	2
0132370	M3	6.4	40.0	6.0	6.5	2
0132371	M3	6.4	41.0	6.0	6.5	2
0132372	M3	6.4	45.0	6.0	6.5	2

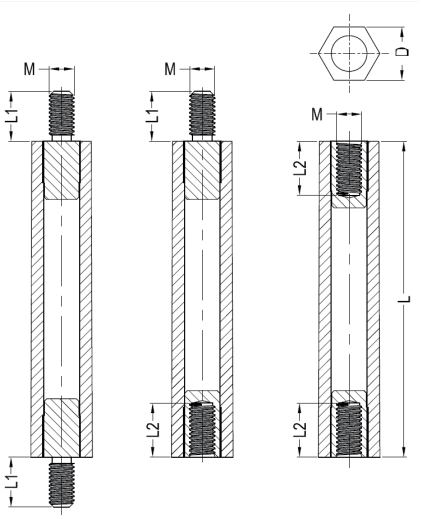

Continued...
转下页 ...

Tel: +86 512 6733 5586 or 6733 5583
Email: china@optimascomponents.com

Metric Hex Threaded Insulators
公制六边形螺纹间隔柱



Specifications: RoHS ✓
规格

Material: Body - Nylon 66, Insert - Brass
Colour: Natural
Flammability: UL94V2

材料：柱体 - 尼龙 66, 嵌件 - 黄铜
颜色：本色
阻燃等级：UL94V2

- Nylon 66 body combined with brass insert provides fully insulated and strong fixing for printed circuit boards and busbars etc
- 采用尼龙 66 柱体压入带螺纹铜嵌件确保印刷电路板和线路连接片等实现完全的绝缘并且可靠地固定

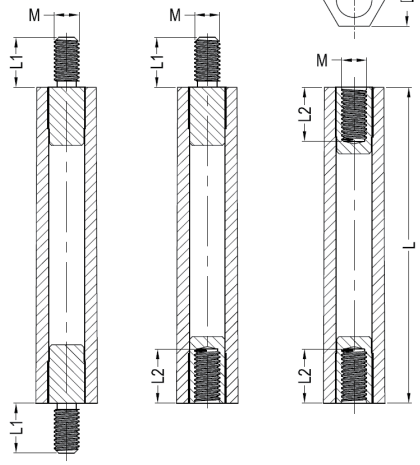

Fig.1 / 图 1 Fig.2 / 图 2 Fig.3 / 图 3

Part Number 零件号	Thread M 螺纹尺寸	D	L	L1	L2	Fig. 图
0132460	M4	8.0	12.0	6.0	6.0	2
0132461	M4	8.0	15.0	6.0	6.0	2
0132462	M4	8.0	20.0	6.0	6.0	2
0132463	M4	8.0	22.0	6.0	6.0	2
0132464	M4	8.0	27.0	6.0	6.0	2
0132465	M4	8.0	30.0	6.0	6.0	2
0132466	M4	8.0	36.0	6.0	6.0	2
0132467	M4	8.0	40.0	6.0	6.0	2
0132468	M4	8.0	45.0	6.0	6.0	2
0132469	M4	9.5	90.0	6.0	8.5	2
0132562	M5	9.5	19.0	8.0	8.5	2
0132563	M5	9.5	40.0	10.0	10.5	2
0132564	M5	9.5	45.0	10.0	10.5	2
0132565	M5	9.5	50.0	10.0	10.5	2
0132566	M5	9.5	58.0	10.0	10.5	2
0132567	M5	9.5	70.0	10.0	10.5	2
0132568	M5	9.5	84.0	10.0	10.5	2
0132569	M5	9.5	88.2	10.0	10.5	2
0132570	M5	9.5	90.0	10.0	10.5	2
0132650	M6	12.7	50.0	12.7	12.7	2
0132651	M6	12.7	55.0	12.7	12.7	2
0132652	M6	12.7	60.0	12.7	12.7	2
0133262	M2.5	6.4	18.0	-	6.5	3
0133361	M3	6.4	15.0	-	6.5	3
0133362	M3	6.4	18.0	-	6.5	3
0133363	M3	6.4	20.0	-	6.5	3
0133364	M3	6.4	22.0	-	6.5	3
0133365	M3	6.4	25.0	-	6.5	3
0133366	M3	6.4	28.0	-	6.5	3
0133367	M3	6.4	30.0	-	6.5	3
0133368	M3	6.4	36.0	-	6.5	3
0133369	M3	6.4	38.0	-	6.5	3
0133370	M3	6.4	40.0	-	6.5	3
0133371	M3	6.4	41.0	-	6.5	3
0133372	M3	6.4	45.0	-	6.5	3
0133461	M4	8.0	15.0	-	6.0	3
0133462	M4	8.0	20.0	-	6.0	3
0133463	M4	8.0	22.0	-	6.0	3
0133464	M4	8.0	27.0	-	6.0	3
0133465	M4	8.0	30.0	-	6.0	3
0133466	M4	8.0	36.0	-	6.0	3
0133467	M4	8.0	40.0	-	6.0	3
0133468	M4	8.0	45.0	-	6.0	3
0133469	M4	9.5	90.0	-	8.5	3
0133562	M5	9.5	19.0	-	8.5	3
0133563	M5	9.5	40.0	-	10.5	3
0133564	M5	9.5	45.0	-	10.5	3
0133565	M5	9.5	50.0	-	10.5	3
0133566	M5	9.5	58.0	-	10.5	3
0133567	M5	9.5	70.0	-	10.5	3
0133568	M5	9.5	84.0	-	10.5	3
0133569	M5	9.5	88.2	-	10.5	3
0133570	M5	9.5	90.0	-	10.5	3
0133650	M6	12.7	50.0	-	12.7	3
0133651	M6	12.7	55.0	-	12.7	3
0133652	M6	12.7	60.0	-	12.7	3

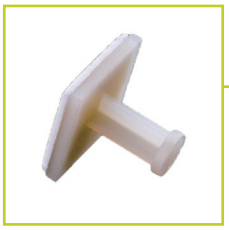

Self-Adhesive Push Spacers
背胶式间隔柱

- Secured to the chassis by a self-adhesive pad
- No need for screw holes in the chassis

- 通过背胶固定于底板上
- 不需要在底板上开螺钉孔

Specifications: 规格 — RoHS ✓

Material: Nylon 66
Colour: Natural

材料：尼龙 66
颜色：本色

Part Number and Flammability 零件号和阻燃等级		A	Adhesive Tape Dimensions 背胶尺寸
UL94V-2	UL94V-0		
0591050	0591150	6.0	17.0 x 17.0 x 1.0
0591051	0591151	8.0	17.0 x 17.0 x 1.0
0591052	0591152	10.0	17.0 x 17.0 x 1.0
0591053	0591153	12.0	17.0 x 17.0 x 1.0
0591054	0591154	14.0	17.0 x 17.0 x 1.0
0591055	0591155	16.0	17.0 x 17.0 x 1.0

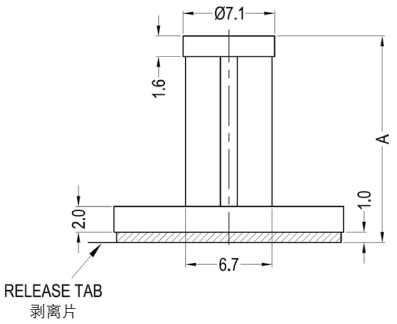



Self-Adhesive Mini Push Spacers
背胶式微型间隔柱

- Secured to the chassis by a self-adhesive pad
- No need for screw holes in the chassis

- 通过背胶固定于底板上
- 不需要在底板上开螺钉孔

Specifications: 规格 — RoHS ✓

Material: Nylon 66
Flammability: UL94V2

材料：尼龙 66
阻燃等级：UL94V2

Part Number and Colour 零件号和颜色		A	Adhesive Tape Dimensions 背胶尺寸
Natural 本色	Black 黑色		
0591060	0591060-BK	4.8	12.5 x 12.5 x 1.0
0591061	0591061-BK	6.4	12.5 x 12.5 x 1.0
0591062	0591062-BK	7.9	12.5 x 12.5 x 1.0
0591063	0591063-BK	9.5	12.5 x 12.5 x 1.0
0591064	0591064-BK	11.1	12.5 x 12.5 x 1.0
0591065	0591065-BK	12.7	12.5 x 12.5 x 1.0
0591066	0591066-BK	14.3	12.5 x 12.5 x 1.0
0591067	0591067-BK	15.9	12.5 x 12.5 x 1.0
0591068	0591068-BK	19.1	12.5 x 12.5 x 1.0
0591069	0591069-BK	22.2	12.5 x 12.5 x 1.0
0591070	0591070-BK	25.4	12.5 x 12.5 x 1.0

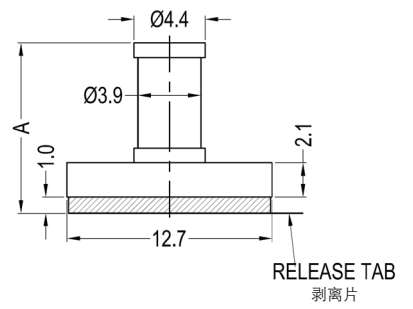

Tel: +86 512 6733 5586 or 6733 5583
Email: china@optimascomponents.com

Cupped Dual Locking Circuit Board Supports
杯形两头锁定式间隔柱

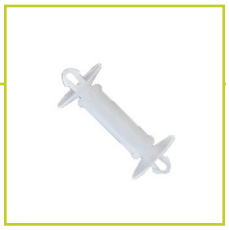

Specifications: RoHS ✓
规格

Material: Nylon 66
Colour: Natural
Flammability Rating: UL94V2

材料：尼龙 66
颜色：本色
阻燃等级：UL94V2

- Easy to install - simply snap into place to hold the PCB in position
- Cupped base completely covers the hole
- 易于安装 - 只要将其卡入就能将印刷电路板固定到位
- 杯形底座可以完全覆盖安装孔

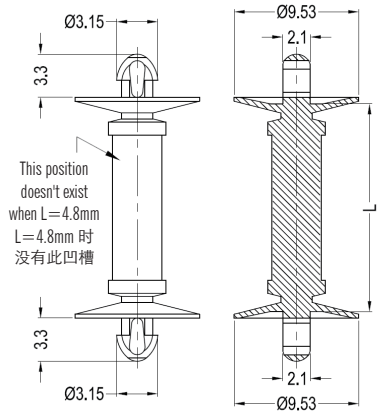

Part Number 零件号	Dimensions 尺寸				
	L	Top Hole 顶端安装孔		Bottom Hole 底部安装孔	
		Hole Size 孔径	Panel Thickness 面板厚度	Hole Size 孔径	Panel Thickness 面板厚度
0591075	4.8	2.54	1.57	2.54	1.57
0591076	6.4	2.54	1.57	2.54	1.57
0591077	7.9	2.54	1.57	2.54	1.57
0591078	9.5	2.54	1.57	2.54	1.57
0591079	11.1	2.54	1.57	2.54	1.57
0591080	12.7	2.54	1.57	2.54	1.57
0591081	14.3	2.54	1.57	2.54	1.57
0591082	15.9	2.54	1.57	2.54	1.57

Teardrop Push Spacers
水滴头推入式间隔柱



Specifications: RoHS ✓
规格

Material: Nylon 66

材料：尼龙 66

- Firmly and accurately maintains a constant distance between the chassis and PC board
- 牢固而准确的保持底板与印刷电路板之间的距离

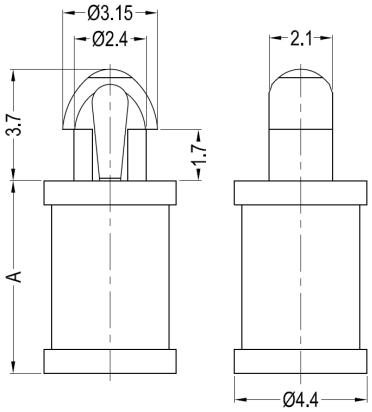

Part Number, Flammability and Colour 零件号，阻燃等级和颜色				A	Top Hole Size 顶端孔径	Panel Thickness 面板厚度
UL94V-2		UL94V-0				
Natural 本色	Black 黑色	Natural 本色	Black 黑色			
0591086	**0591086-BK**	**0591186**	**0591186-BK**	1.6	2.54	1.63
0591087	**0591087-BK**	**0591187**	**0591187-BK**	3.2	2.54	1.63
0591088	**0591088-BK**	**0591188**	**0591188-BK**	4.8	2.54	1.63
0591089	**0591089-BK**	**0591189**	**0591189-BK**	6.4	2.54	1.63
0591090	**0591090-BK**	**0591190**	**0591190-BK**	7.9	2.54	1.63
0591091	**0591091-BK**	**0591191**	**0591191-BK**	9.5	2.54	1.63
0591092	**0591092-BK**	**0591192**	**0591192-BK**	11.1	2.54	1.63
0591093	**0591093-BK**	**0591193**	**0591193-BK**	12.7	2.54	1.63
0591094	**0591094-BK**	**0591194**	**0591194-BK**	14.3	2.54	1.63
0591095	**0591095-BK**	**0591195**	**0591195-BK**	15.9	2.54	1.63
0591096	**0591096-BK**	**0591196**	**0591196-BK**	22.2	2.54	1.63



Arrowhead Push Spacers
箭头推入式间隔柱

- Firmly and accurately maintains a constant distance between the chassis and PC board
- 牢固而准确的保持底板与印刷电路板之间的距离

Specifications: 规格 — RoHS ✓

Material: Nylon 66
Colour: Natural
材料：尼龙 66
颜色：本色

Part Number and Flammability 零件号和阻燃等级		A	Top Hole Size 顶端孔径	Panel Thickness 面板厚度	Fig. 图
UL94V-2	UL94V-0				
0594002	0594102	4.8	4.75	0.79 - 1.98	1
0594003	0594103	6.4	4.75	0.79 - 1.98	1
0594004	0594104	7.9	4.75	0.79 - 1.98	1
0594005	0594105	9.5	4.75	0.79 - 1.98	1
0594006	0594106	11.1	4.75	0.79 - 1.98	1
0594007	0594107	12.7	4.75	0.79 - 1.98	1
0594009	0594109	15.9	4.75	0.79 - 1.98	1
0594010	0594110	19.1	4.75	0.79 - 1.98	1
0594011	0594111	22.2	4.75	0.79 - 1.98	1
0595001	0595101	3.2	3.18	0.79 - 1.98	2
0595002	0595102	4.8	3.18	0.79 - 1.98	2
0595003	0595103	6.4	3.18	0.79 - 1.98	2
0595004	0595104	7.9	3.18	0.79 - 1.98	2
0595005	0595105	9.5	3.18	0.79 - 1.98	2
0595006	0595106	11.1	3.18	0.79 - 1.98	2
0595007	0595107	12.7	3.18	0.79 - 1.98	2
0595008	0595108	14.3	3.18	0.79 - 1.98	2
0595009	0595109	15.9	3.18	0.79 - 1.98	2

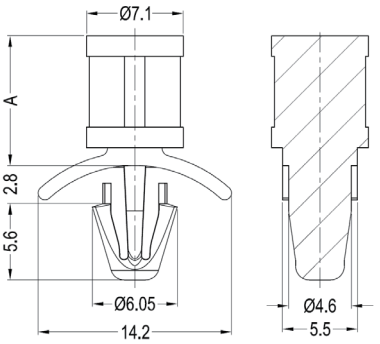

Fig.1 / 图 1

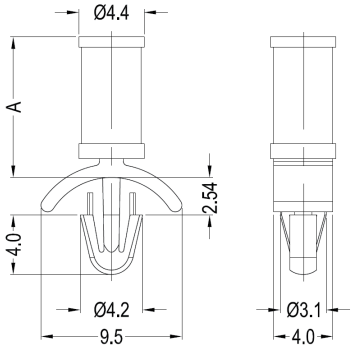

Fig.2 / 图 2



Stackable Self-Retaining Spacers - Type I
I 型可叠加自固定式间隔柱

- PCB mounted to spacer with a self-tapping screw (not supplied)
- 使用自攻螺钉将印刷电路板固定在间隔柱上（螺钉不提供）

Specifications: 规格 — RoHS ✓

Material: Nylon 66
Colour: Natural
Flammability Rating: UL94V2
材料：尼龙 66
颜色：本色
阻燃等级：UL94V2

Part Number 零件号	Screw Size 螺钉尺寸	A	Top Hole Size 顶端孔径	Panel Thickness 面板厚度	Fig. 图
0594020	#4/M3	3.2	4.75	1.57	1
0594021	#4/M3	4.8	4.75	1.57	1
0594022	#4/M3	6.4	4.75	1.57	1
0594023	#4/M3	7.9	4.75	1.57	1
0594024	#4/M3	9.5	4.75	1.57	1
0594025	#4/M3	11.1	4.75	1.57	1
0594026	#4/M3	12.7	4.75	1.57	1
0594027	#4/M3	15.9	4.75	1.57	1
0594028	#4/M3	19.1	4.75	1.57	1
0594029	#4/M3	22.2	4.75	1.57	1
0594030	#4/M3	25.4	4.75	1.57	1
0595022	#8/M4	6.4	5.94	1.57	2
0595023	#8/M4	7.9	5.94	1.57	2
0595024	#8/M4	9.5	5.94	1.57	2
0595025	#8/M4	11.1	5.94	1.57	2
0595026	#8/M4	12.7	5.94	1.57	2
0595027	#8/M4	15.9	5.94	1.57	2
0595028	#8/M4	19.1	5.94	1.57	2
0595029	#8/M4	22.2	5.94	1.57	2
0595030	#8/M4	25.4	5.94	1.57	2

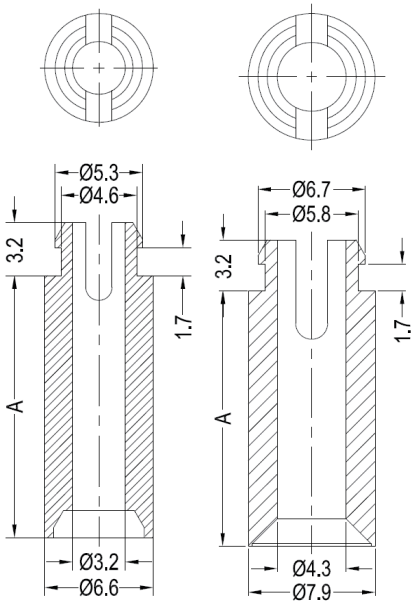

Fig.1 / 图 1　　Fig.2 / 图 2

Tel: +86 512 6733 5586 or 6733 5583
Email: china@optimascomponents.com



Specifications: RoHS ✓
规格

Material: Nylon 66
Colour: Natural
材料：尼龙 66
颜色：本色

- PCB mounted to spacer with a self-tapping screw (not supplied)
- 使用自攻螺钉将印刷电路板固定在间隔柱上（螺钉不提供）

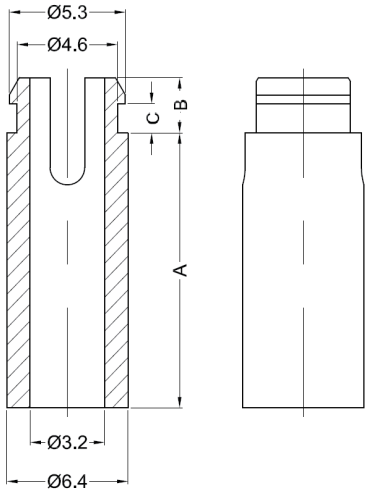

Fig.1 / 图 1

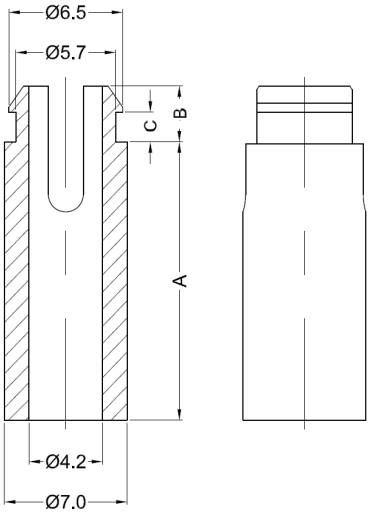

Fig.2 / 图 2

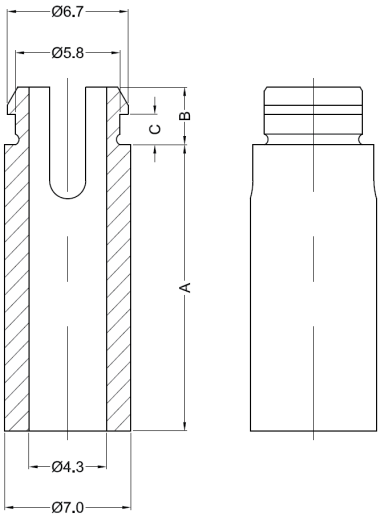

Fig.3 / 图 3

Part Number and Flammability 零件号和阻燃等级		Screw Size 螺钉尺寸	A	B	C	Top Hole Size 顶端孔径	Panel Thickness 面板厚度	Fig. 图
UL94V-2	UL94V-0							
0595040	0595140	#4/M3	3.2	3.2	1.7	4.7	1.57	1
0595041	0595141	#4/M3	4.8	3.2	1.7	4.7	1.57	1
0595042	0595142	#4/M3	6.4	3.2	1.7	4.7	1.57	1
0595043	0595143	#4/M3	7.9	3.2	1.7	4.7	1.57	1
0595044	0595144	#4/M3	9.5	3.2	1.7	4.7	1.57	1
0595045	0595145	#4/M3	11.1	3.2	1.7	4.7	1.57	1
0595046	0595146	#4/M3	12.7	3.2	1.7	4.7	1.57	1
0595047	0595147	#4/M3	15.9	3.2	1.7	4.7	1.57	1
0595048	0595148	#4/M3	19.1	3.2	1.7	4.7	1.57	1
0595049	0595149	#4/M3	22.2	3.2	1.7	4.7	1.57	1
0595050	0595150	#4/M3	25.4	3.2	1.7	4.7	1.57	1
0596042	0596142	#6/M3.5	6.4	3.2	1.7	5.9	1.57	2
0596043	0596143	#6/M3.5	7.9	3.2	1.7	5.9	1.57	2
0596044	0596144	#6/M3.5	9.5	3.2	1.7	5.9	1.57	2
0596045	0596145	#6/M3.5	11.1	3.2	1.7	5.9	1.57	2
0596046	0596146	#6/M3.5	12.7	3.2	1.7	5.9	1.57	2
0596047	0596147	#6/M3.5	15.9	3.2	1.7	5.9	1.57	2
0596048	0596148	#6/M3.5	19.1	3.2	1.7	5.9	1.57	2
0596049	0596149	#6/M3.5	22.2	3.2	1.7	5.9	1.57	2
0596050	0596150	#6/M3.5	25.4	3.2	1.7	5.9	1.57	2
0597042	0597142	#8/M4	6.4	3.2	1.7	5.9	1.57	3
0597043	0597143	#8/M4	7.9	3.2	1.7	5.9	1.57	3
0597044	0597144	#8/M4	9.5	3.2	1.7	5.9	1.57	3
0597045	0597145	#8/M4	11.1	3.2	1.7	5.9	1.57	3
0597046	0597146	#8/M4	12.7	3.2	1.7	5.9	1.57	3
0597047	0597147	#8/M4	15.9	3.2	1.7	5.9	1.57	3
0597048	0597148	#8/M4	19.1	3.2	1.7	5.9	1.57	3
0597049	0597149	#8/M4	22.2	3.2	1.7	5.9	1.57	3
0597050	0597150	#8/M4	25.4	3.2	1.7	5.9	1.57	3
0598042	0598142	#8/M4	6.4	3.85	2.3	5.9	2.2	3
0598043	0598143	#8/M4	7.9	3.85	2.3	5.9	2.2	3
0598044	0598144	#8/M4	9.5	3.85	2.3	5.9	2.2	3
0598045	0598145	#8/M4	11.1	3.85	2.3	5.9	2.2	3
0598046	0598146	#8/M4	12.7	3.85	2.3	5.9	2.2	3
0598047	0598147	#8/M4	15.9	3.85	2.3	5.9	2.2	3
0598048	0598148	#8/M4	19.1	3.85	2.3	5.9	2.2	3
0598049	0598149	#8/M4	22.2	3.85	2.3	5.9	2.2	3
0598050	0598150	#8/M4	25.4	3.85	2.3	5.9	2.2	3

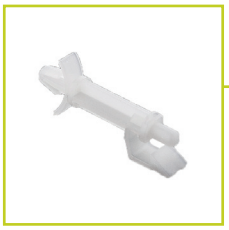

Edge Holding Circuit Board Supports - Arrow Mount
抓边型电路板支撑柱 - 箭头式

- Easily installed and removed, making inspection and maintenance of PC boards easier
- 易于安装和拆卸，便于印刷电路板的检测和维护

Specifications: 规格 — RoHS ✓

Material: Nylon 66
Colour: Natural

材料：尼龙 66
颜色：本色

Part Number and Flammability 零件号和阻燃等级		Dimensions 尺寸				
		A	Top Hole 顶端安装孔		Bottom Hole 底部安装孔	
UL94V-2	UL94V-0		Hole Size 孔径	Panel Thickness 面板厚度	Hole Size 孔径	Panel Thickness 面板厚度
0595062	0595162	9.5	4.0	1.57	4.75	0.79 - 1.98
0595066	0595166	22.2	4.0	1.57	4.75	0.79 - 1.98

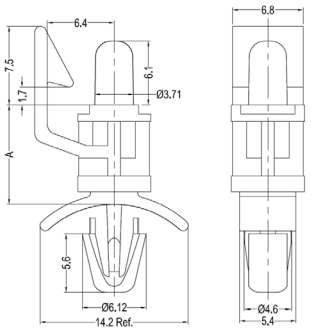

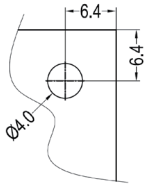

Top Board Hole Location
顶端电路板孔的位置



Edge Holding Circuit Board Supports - Self-Tapping
抓边型电路板支撑柱 - 自攻型

- Easily installed and removed, making inspection and maintenance of PC boards easier
- The bottom hole is for a #6 self-tapping screw
- 易于安装和拆卸，便于印刷电路板的检测和维护
- 底板孔用 #6 的自攻螺钉安装

Specifications: 规格 — RoHS ✓

Material: Nylon 66
Colour: Natural
Flammability Rating: UL94V2

材料：尼龙 66
颜色：本色
阻燃等级：UL94V2

Part Number 零件号	Dimensions 尺寸			
	A	B	Top Hole 顶端安装孔	
			Hole Size 孔径	Panel Thickness 面板厚度
0596060	6.4	5.2	4.0	1.57
0596061	7.9	5.2	4.0	1.57
0596062	9.5	6.4	4.0	1.57
0596063	12.7	6.4	4.0	1.57
0596064	15.9	6.4	4.0	1.57
0596065	19.1	6.4	4.0	1.57
0596066	22.2	6.4	4.0	1.57
0596067	25.4	6.4	4.0	1.57

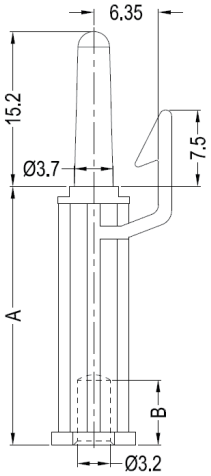

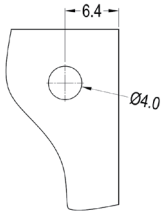

Top Board Hole Location
顶端电路板孔的位置

Tel: +86 512 6733 5586 or 6733 5583
Email: china@optimascomponents.com

Circuit Board Supports - Self-Tapping
自攻型电路板间隔柱



Specifications: 规格 — RoHS ✓

Material: Nylon 66
Colour: Natural

材料：尼龙 66
颜色：本色

- The bottom hole is for a #6 self-tapping screw
- 底板孔用 #6 的自攻螺钉安装

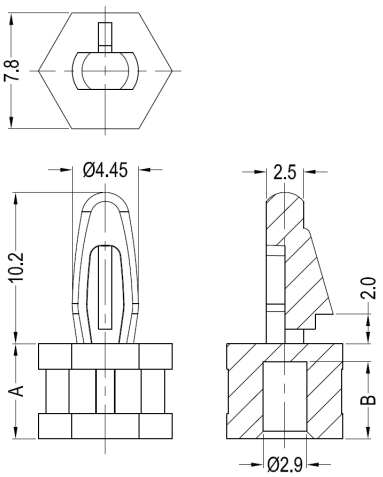

Part Number and Flammability 零件号和阻燃等级		Dimensions 尺寸			
		A	B	Top Hole 顶端安装孔	
UL94V-2	UL94V-0			Hole Size 孔径	Panel Thickness 面板厚度
0595070	0595170	6.4	5.2	4.0	1.57
0595071	0595171	9.5	7.9	4.0	1.57
0595072	0595172	12.7	7.9	4.0	1.57
0595073	0595173	15.9	7.9	4.0	1.57
0595074	0595174	19.1	7.9	4.0	1.57
0595075	0595175	22.2	7.9	4.0	1.57
0595076	0595176	25.4	7.9	4.0	1.57
0595077	0595177	28.6	7.9	4.0	1.57
0595078	0595178	31.7	7.9	4.0	1.57
0595079	0595179	35.7	7.9	4.0	1.57

Mini Self-Threading Support Posts
自攻螺纹微型支撑柱



Specifications: 规格 — RoHS ✓

Material: Nylon 66
Colour: Natural
Flammability Rating: UL94V2

材料：尼龙 66
颜色：本色
阻燃等级：UL94V2

- Self-threading into #4 or M3 threaded hole
- 可以自攻进 #4 或 M3 的螺纹孔

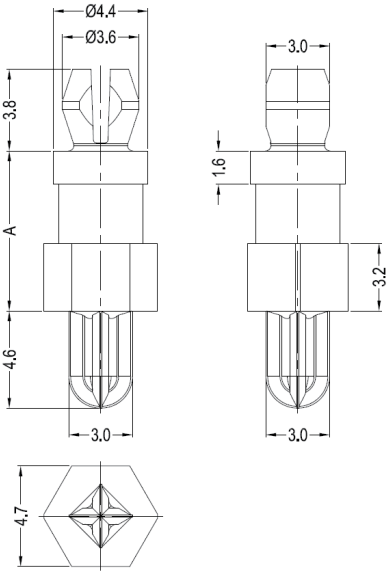

Part Number 零件号	Dimensions 尺寸				
	A	Top Hole 顶端安装孔		Bottom Hole 底部安装孔	
		Hole Size 孔径	Panel Thickness 面板厚度	Hole Size 螺纹孔尺寸	Panel Thickness 面板厚度
0596070	3.2	3.18	1.57	#4/M3	1.6
0596071	4.8	3.18	1.57	#4/M3	1.6
0596072	6.4	3.18	1.57	#4/M3	1.6
0596073	7.9	3.18	1.57	#4/M3	1.6
0596074	9.5	3.18	1.57	#4/M3	1.6
0596075	11.1	3.18	1.57	#4/M3	1.6
0596076	12.7	3.18	1.57	#4/M3	1.6
0596077	14.3	3.18	1.57	#4/M3	1.6
0596078	15.9	3.18	1.57	#4/M3	1.6



Double Blind Hole Circuit Board Supports
两端盲孔安装型电路板间隔柱

- Firmly and accurately maintains a constant distance between the chassis and PC board
- 牢固而准确的保持底板与印刷电路板之间的距离

Specifications: 规格 — **RoHS ✓**

Material: Nylon 66
Colour: Natural

材料：尼龙 66
颜色：本色

Part Number and Flammability 零件号和阻燃等级		Dimensions 尺寸				
		A	Top Hole 顶端安装孔		Bottom Hole 底部安装孔	
UL94V-2	UL94V-0		Hole Size 孔径	Panel Thickness 面板厚度	Hole Size 孔径	Panel Thickness 面板厚度
0595080	0595180	3.0	7.92	6.35	7.92	6.35
0595081	0595181	4.0	7.92	6.35	7.92	6.35
0595082	0595182	6.0	7.92	6.35	7.92	6.35
0595083	0595183	8.0	7.92	6.35	7.92	6.35
0595084	0595184	10.0	7.92	6.35	7.92	6.35
0595085	0595185	12.0	7.92	6.35	7.92	6.35
0595086	0595186	14.0	7.92	6.35	7.92	6.35
0595087	0595187	16.0	7.92	6.35	7.92	6.35
0595088	0595188	18.0	7.92	6.35	7.92	6.35
0595089	0595189	20.0	7.92	6.35	7.92	6.35

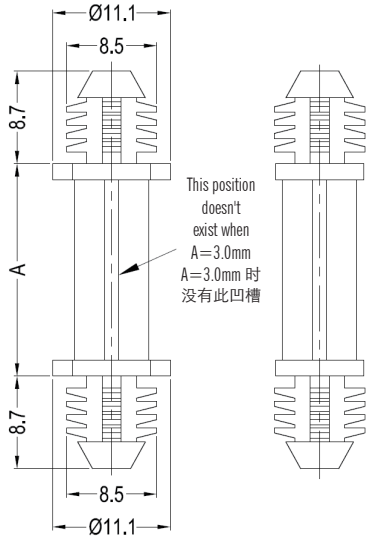

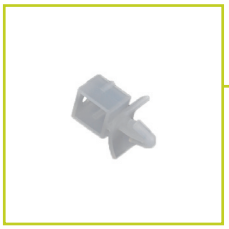

Circuit Board Stacking Spacers
叠加式电路板间隔柱

- Spacers snap together for stacking boards
- 间隔柱可以相互卡在一起以堆叠电路板

Specifications: 规格 — **RoHS ✓**

Material: Nylon 66
Colour: Natural
材料：尼龙 66
颜色：本色

Part Number and Flammability 零件号和阻燃等级		A	Hole Size 孔径	Panel Thickness 面板厚度
UL94V-2	UL94V-0			
0596080	0596180	10.9	4.0	0.79 - 1.98
0596081	0596181	14.0	4.0	0.79 - 1.98
0596082	0596182	17.3	4.0	0.79 - 1.98
0596083	0596183	20.3	4.0	0.79 - 1.98

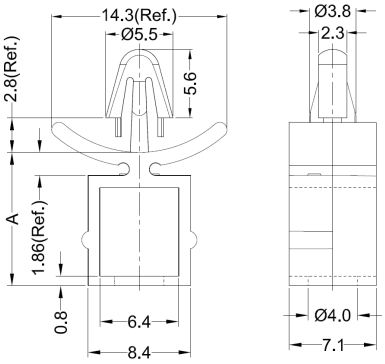



Spacer Nuts
螺帽固定间隔柱

- The top hole is for a #4 self-tapping screw
- 顶板孔用 #4 的自攻螺钉安装

Specifications: 规格 — **RoHS ✓**

Material: Nylon 66
Colour: Natural
材料：尼龙 66
颜色：本色

Part Number and Flammability 零件号和阻燃等级		A	Bottom Hole 底部安装孔	
UL94V-2	UL94V-0		Hole Size 孔径	Panel Thickness 面板厚度
0595090	0595190	4.8	4.3 (Optional square hole see detail / 也可用于方形孔，尺寸见图)	1.6
0595091	0595191	6.4	4.3 (Optional square hole see detail / 也可用于方形孔，尺寸见图)	1.6

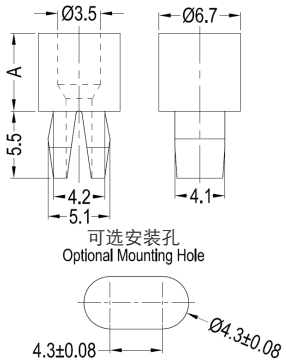

OPTIMAS

Tel: +86 512 6733 5586 or 6733 5583
Email: china@optimascomponents.com

Sales Terms & Conditions
销售条款和条件

OPTIMAS SOLUTIONS LTD General Conditions of Sale

The Purchaser's attention is in particular drawn to the provisions of Condition 11

1. DEFINITIONS
"The Company" means Optimas Solutions Ltd or the Optimas entity otherwise identified on the face of this document.
"The Purchaser" means the person, firm or company to be supplied with the goods and services by the Company.
"Goods" means the goods, materials and/or other items to be supplied pursuant to the Contract.
"Services" means the services to be supplied pursuant to the Contract.
"The Contract" means the contract for sale and purchase of the Goods and supply of the Services made between the Company and the Purchaser to which these Conditions apply.

2. SCOPE
These Conditions apply to all sales of Goods and supplies of Services by the Company and shall prevail over any terms or conditions referred to in the Purchaser's order or in correspondence or elsewhere unless specifically agreed to in writing by the Company and expressed to form part of the Contract and any conditions or stipulations to the contrary are hereby excluded or extinguished.

3. QUOTATION
A quotation by the Company does not constitute an offer and the Company reserves the right to withdraw or amend the same at any time prior to the Company's acceptance of the Purchaser's order.

4. PRICES

4.1. Unless the prices quoted are stated to be fixed the prices payable for the Goods or Services shall be those charged by the Company at the time of despatch or supply of the Services so that the Company shall have the right at any time to revise quoted prices to take account of increases in cost including (without limitation) costs of raw materials or labour and any variation in exchange rates.

4.2. Quoted prices for the Goods are "ex-works" and exclusive of Value Added Tax and other duty levy or tax assessed against the Goods or Services by any Government or other authority.

5. TERMS OF PAYMENT

5.1. Subject to Condition 5.5 below payment of invoices shall, unless otherwise agreed in writing, be made in full without any deduction or set off within 30 days of the date of invoice.

5.2. Any extension of credit allowed to the Purchaser may be changed or withdrawn at any time.

5.3. The Company may claim interest at its discretion under the Late Payment of Commercial Debts (Interest) Act 1998.

5.4. If in the opinion of the Company the creditworthiness of the Purchaser shall have deteriorated prior to the delivery the Company may require full or partial payment of the price prior to delivery or the provision of security for payment by the Purchaser in a form acceptable to the Company. 5.5. In any case where the Purchaser is resident outside the United Kingdom and unless otherwise agreed the price of the goods shall be secured by an irrevocable letter of credit satisfactory to the Company established by the Purchaser in favour of the Company immediately upon receipt of the Company's acceptance and confirmed by a United Kingdom bank acceptable to the Company. The letter of credit shall be for the Contract price inclusive of any tax or duty payable by the Purchaser and shall be valid for the period specified by the Company. The Company shall be entitled to payment on presentation to such United Kingdom bank of the documents specified by the Company.

6. DELIVERY

6.1. Delivery or performance dates mentioned in any quotation or acceptance form or elsewhere are approximate only and not of any contractual effect, and time for delivery shall not be made of the essence by notice. The Company shall not be under any liability to the Purchaser in respect of any delay in delivery howsoever arising.

6.2. In the event of the Purchaser returning or failing to accept any delivery of the Goods in accordance with the Contract the Company shall be entitled at its option to invoice the Purchaser for such Goods and either to deliver and invoice the Purchaser for the balance of Goods then remaining undelivered or to suspend or cancel further deliveries under the Contract. The Company shall be entitled to store at the risk of the Purchaser any goods which the Purchaser refuses or fails to accept and the Purchaser shall in addition to the invoice price pay all costs of such storage and any additional costs or carriage incurred as a result of such refusal or failure. The Company shall be entitled after the expiration of 3 months from the date upon which the price became payable to dispose of the goods in such manner as the Company may determine.

6.3. Unless otherwise specified delivery shall be "ex-works" so that the goods shall be deemed to have been delivered and the risk therein to have passed to the Purchaser upon the Company notifying the Purchaser that the goods are available for collection.

6.4. In any case where Goods are sold CIF or FOB or on the basis of any other international trade term the meaning of such terms contained in the latest Incoterms shall apply as if expressly incorporated herein except insofar as any part of the same may be inconsistent with any of the provisions contained in these Conditions.

6.5. In the case of any sale of goods FOB the Company shall be under no obligation to give the Purchaser the notice specified in section 32(3) of the Sale of Goods Act 1979.

6.6. Unless otherwise expressly agreed the Company may effect delivery in one or more instalments. Where delivery is effected by installments each installment shall be treated as a separate contract.

6.7. If the Contract involves more than one delivery and any default is made in payment the Company shall have the right to suspend all or any further deliveries pending payment or to terminate the Contract in its entirety by notice in writing to the Purchaser.

7. EXPORT
The Purchaser represents and warrants that it will not violate U.S., E.U., or other applicable local country export-related laws with respect to the Goods.

8. TITLE

8.1. The Goods shall remain the sole and absolute property of the Company as legal and beneficial owner until such time as the Company has received in cleared funds all sums due to it in respect of: (a) the Goods, and (b) all other sums which are or which become due to the Company from the Purchaser on any account.

8.2. Until such payment the Purchaser shall be in possession of the goods solely as bailee for the Company and in fiduciary capacity and the Purchaser shall store the goods in such a way as to enable them to be identified as the property of the Company.

8.3. The Company reserves the immediate right of re-possession of any Goods to which it has retained title as aforesaid and thereafter to re-sell the same and for this purpose the Purchaser hereby grants an irrevocable right and licence to the Company's employees and agents to enter upon all or any of its premises with or without vehicles during normal business hours. The right shall continue to subsist notwithstanding the termination of the Contract for any reason and is without prejudice to any accrued right of the Company.

8.4. The Purchaser agrees immediately upon being so requested by the Company to assign to the Company all rights and claims which the Purchaser may have against its customers arising from sub-sales of Goods until payment is made in full.

8.5. Notwithstanding the foregoing provisions of this Condition 8 the Purchaser shall be entitled to use the Goods in the ordinary course of its business.

9. VARIATIONS
The Company shall be deemed to have fulfilled its contractual obligations in respect of any delivery though the quantity may be up to ten per cent more or less than the quantity specified in the Contract and in such event the Purchaser shall pay for the actual quantity delivered.

10. SPECIFICATIONS BY THE PURCHASER
The Purchaser shall indemnify and keep indemnified the Company against all claims, costs, damages and expenses incurred by the Company or for which the Company may become liable as a direct or indirect result of the carrying out of any work required to be done on or to the goods in accordance with the requirements of specifications of the Purchaser involving any infringement or claim or infringement of any intellectual property right vested in another person, firm or company.

11. LIABILITY

11.1. The Company shall not be liable for any visible defects or non-conformities and/or for any shortage in the quantity delivered unless a claim in writing shall have been received by the Company from the Purchaser within 7 days of delivery of the Goods. Where liability for any shortage is accepted by the Company, the Company's only obligation shall be to make good such shortage.

11.2. The Company warrants that (subject to the other provisions of these Conditions), for a period of 12 months (or, in the case of software, 30 days) from delivery, the Goods will be free from material defects in material and workmanship and materially in accordance with the specifications provided by the manufacturer of the Goods.

11.3. The Company will perform the Services with reasonable skill and care.

11.4. The Company makes no warranty that software will operate uninterrupted or error-free.

11.5. The warranties in Condition 11.2 do not cover wear and tear and shall not apply to Goods which have been subjected to misuse or abuse, neglect, accident, damage, improper storage, improper installation or maintenance.

11.6 Subject to Conditions 11.4 and 11.5, if the Goods do not comply with the warranties in Condition 11.2 the Company shall at its option replace or repair such Goods free of charge or refund the price of such Goods provided that, if the Company so requests, the Purchaser shall, at the Purchaser's expense, return the Goods or the part of such Goods which is defective to the Company. The Purchaser's exclusive remedy for the Company's breach of the warranties under Condition 11.2 will be the Company's obligation to repair, replace or refund (in all cases at the Company's option). The Purchaser shall proceed exclusively and directly against the manufacturer of the Goods at the Company's request. Any repaired or replacement Goods shall be guaranteed on these terms for the unexpired portion of the 12 month period.

11.7 Without prejudice to the repair or provision of replacement Goods, the Company's maximum aggregate liability (including any liability for the acts or omissions of its employees, agents and sub-contractors) to the Purchaser whether for tort (including negligence or breach of statutory duty), breach of contract (including deliberate, repudiatory breach by the Company), misrepresentation, restitution or otherwise shall in no circumstances exceed 50% of the cost of the relevant Goods or 50% of the cost of the relevant Services which give rise to such liability, as determined by the net price invoiced to the Purchaser.

11.8. The Company shall not be liable to the Purchaser for loss of profit, loss of business or depletion of goodwill in each case whether direct, indirect or consequential, or any claims for consequential compensation whatsoever (howsoever caused) which arise out of or in connection with the Contract, whether such loss or claim was foreseeable or in the contemplation of the parties and whether arising in or caused by breach of contract, tort (including negligence and breach of statutory duty), indemnity or otherwise.

11.9. Subject to the foregoing all conditions, warranties, representations and other terms expressed or implied by statute, common law or otherwise (save for the conditions implied by section 12 of the Sale of Goods Act 1979 and section 2 of the Supply of Goods and Services Act 1982) are, to the fullest extent permitted by law, hereby excluded.

11.10. Nothing in this Condition 11 or otherwise in the Contract, excludes or limits the liability of the Company (a) for death or personal injury caused by the Company's negligence; or (b) for any matter which it would be illegal for the Company to exclude or attempt to exclude its liability; or (c) for fraud or fraudulent misrepresentation.

12. LICENCES AND CONSENTS

12.1. The Contract is conditional upon the obtaining of all licences or consents necessary for its performance (other than for the importation of the Goods by the Purchaser) in which connection the Purchaser shall sign all such forms and documents and render such other assistance to the Company as may be necessary.

12.2. The Purchaser shall obtain at its own expense any licence or consent required for the importation of the Goods by the Purchaser and if necessary or so required, shall produce evidence of the same to the Company on demand.

13. PURCHASER-OWNED MATERIALS
Title and risk of loss to Purchaser-owned materials that are in the Company's possession shall remain with the Purchaser. The Company shall not be liable for any loss or damage to Purchaser-owned materials stored by the Company unless caused solely by the Company's negligence. Payment by the Company for such loss or damage shall be limited to the direct manufacturing cost of the Purchaser-owned materials (if it is manufactured by the Purchaser or its affiliates), or the replacement cost (if it was purchased from a third party), in either instance less the salvage value. The Purchaser shall be responsible for insuring its materials against all loss or damage not caused solely by the Company's negligence. The Company assumes no liability for loss or damage to Purchaser-owned materials caused by any force majeure circumstance (as defined in Condition 14.2 below).

14. FORCE MAJEURE

14.1. The Company shall not be liable to the Purchaser for any loss or damage which may be suffered by the Purchaser as a direct or indirect result of the supply of the Goods or Services by the Company being prevented, hindered or delayed by reason of any force majeure circumstances.

14.2. In this Condition "force majeure circumstances" shall mean any act of God, riot, strike, lock-out, trade dispute or labour disturbances, accident, breakdown of plant or machinery, fire, flood, difficulty in obtaining workmen, material or transport or other circumstances whatsoever outside the control of the Company affecting the provision of the Goods or of raw materials therefor by the Company's usual source of supply or the manufacture of the Goods by the Company's normal means or the delivery of the Goods by the Company's normal route or means of delivery.

15. TERMINATION
If the Purchaser enters into a deed of arrangement or commits an act of bankruptcy or compounds with his creditors or if a receiving order is made against him or (being a company) it passes a resolution or the Court makes an order that the Purchaser be wound up (otherwise than for the purpose of amalgamation or reconstruction) or if a receiver, administrator or administrative receiver is appointed of any of the assets or undertaking of the Purchaser or if circumstances arise which entitle the Court or a creditor to appoint a receiver, manager or administrator or which entitle the Court to make a winding-up order or if the Purchaser takes or suffers any similar action in consequence of debt or commits any breach of any part of this or any other contract between the Company and the Purchaser the Company may stop any Goods in transit and suspend further deliveries and by notice in writing to the Purchaser may immediately terminate the Contract without prejudice to the provisions of Condition 5.3 and to existing claim.

16. WAIVER
The failure on the part of either party to the Contract to exercise or enforce any rights conferred by the Contract shall not be deemed to be a waiver of any such right nor operate so as to bar the exercise or enforcement thereof at any time or times thereafter.

17. NOTICES
Any notice required to be given hereunder in writing shall be deemed to have been duly given if sent by pre-paid first-class post or facsimile addressed to the party concerned at its principal place of business or last known address.

18. HEADINGS
Headings to any of these Conditions are included to facilitate reference only and shall not affect the construction hereof.

19. SEVERANCE
If any Condition of the Contract (or part of any Condition) is found by any court or other authority of competent jurisdiction to be invalid, illegal or unenforceable, that Condition or part-Condition shall, to the extent required, be deemed not to form part of the Contract, and the validity and enforceability of the other Conditions shall not be affected.

20. GOVERNING LAW
The Contract shall be governed by and construed and interpreted in accordance with the laws of England and for the purposes of settlement of any disputes arising out of or in connection with the Contract the parties hereby submit themselves to the exclusive jurisdiction of the English Courts.

21. TYPE OF SALES TRANSACTION
These General Conditions of Sale do not apply to electronic nor internet transactions. The web-sites used by the Purchaser to enter such electronic orders contain their own specific general terms & conditions.

OPTIMAS





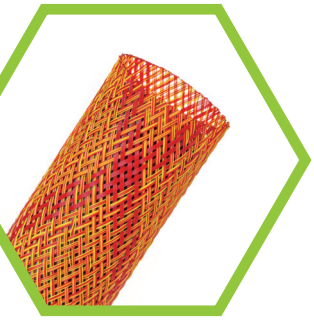

Optimas Solutions – Components Division
(Asia Pacific Headquarter)
A: No. 96, Weixi Road, Weiting Town, Suzhou Industrial Park,
Suzhou, Jiangsu, P.R.C 215121
T: +86 512 6733 5583 or 6733 5586
E: china@optimascomponents.com.cn

安普达 – 零部件事业部
（亚太总部）
A: 中国．江苏省．苏州市．工业园区．
唯亭镇．唯西路 96 号 215121
T: +86 512 6733 5583 或 6733 5586
E: china@optimascomponents.com.cn

